Dist	COUNTY	ROUTE	POST MILES TOTAL PROJECT	SHEET No.	TOTAL SHEETS
10	SJ	4,5	Var	99	486

REGISTERED CIVIL ENGINEER 12/24/12 DATE

7-22-13
PLANS APPROVAL DATE

REGISTERED PROFESSIONAL ENGINEER MARTHA M DADALA No. 66275 Exp. 6/30/2014 CIVIL STATE OF CALIFORNIA

THE STATE OF CALIFORNIA OR ITS OFFICERS OR AGENTS SHALL NOT BE RESPONSIBLE FOR THE ACCURACY OR COMPLETENESS OF SCANNED COPIES OF THIS PLAN SHEET.

RAJAPPAN & MEYER
CONSULTING ENGINEERS INC.
1038 LEIGH AVE, SUITE 100
SAN JOSE, CA 95126

SJCOG
555 E. WEBER AVE.
STOCKTON, CA 95202-2804

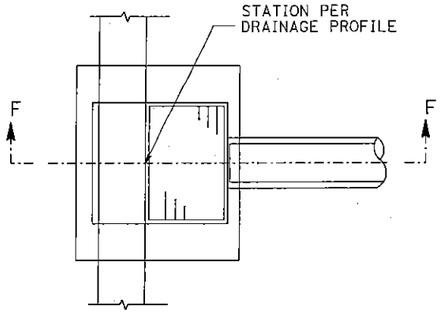

PLAN

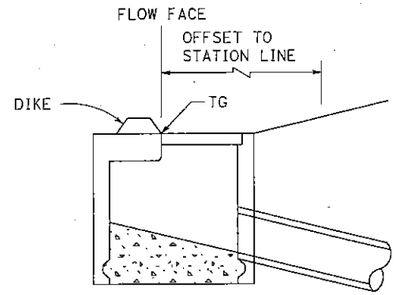

SECTION F-F

INLET ADJACENT TO HMA DIKE

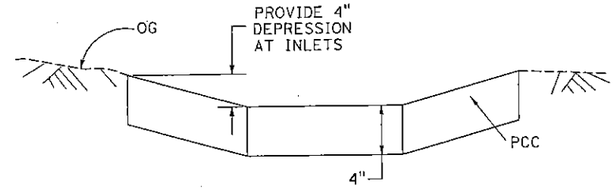

SECTION A-A

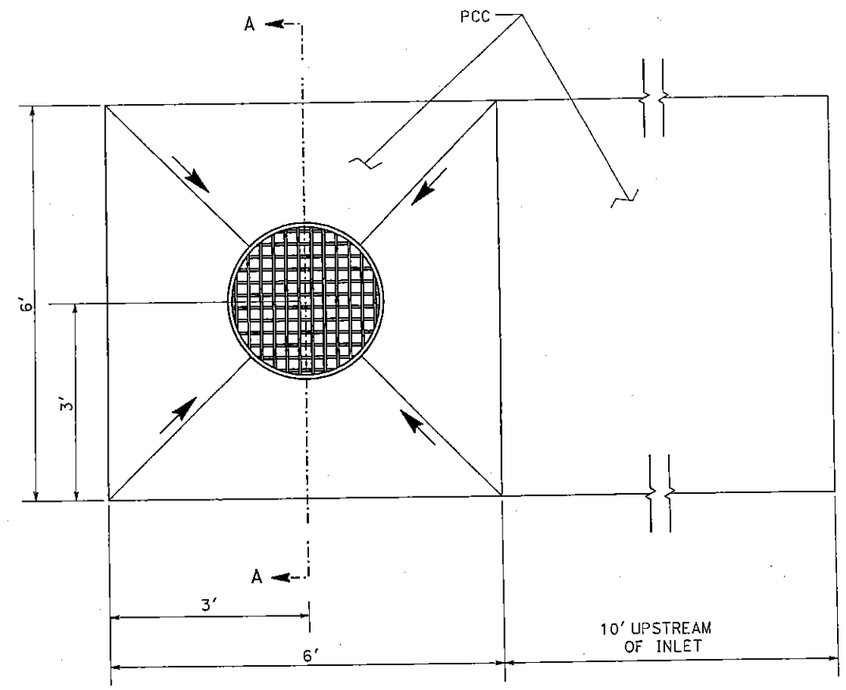

PLAN

PCC APRON FOR INLET DEPRESSION

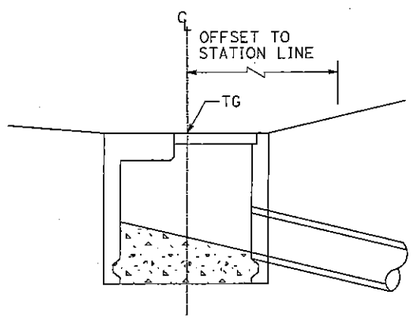

SECTION B-B

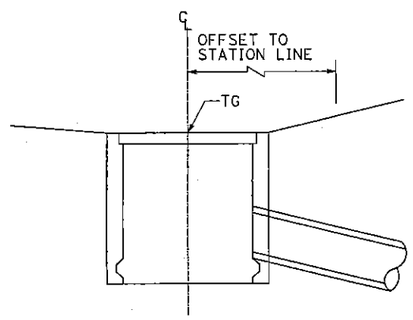

SECTION C-C

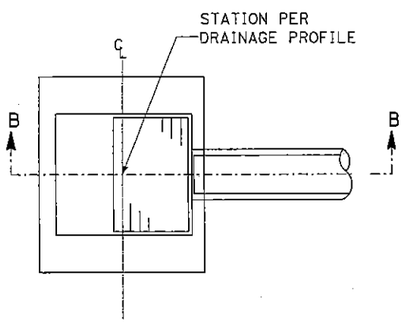

PLAN

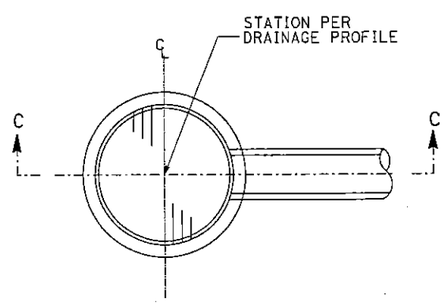

PLAN

FIELD INLET

8 (a)(c)(e)
9 (e)
11 (g)(i)(k)
13 (c)
21 (m)(q)
23 (s)(w)(cc)

DRAINAGE DETAILS

NO SCALE

DD-1

STATE OF CALIFORNIA - DEPARTMENT OF TRANSPORTATION
Caltrans

CONSULTANT FUNCTIONAL SUPERVISOR: KEITH MEYER
CALCULATED-DESIGNED BY: HUSAM ABURABI
CHECKED BY: MARTHA DADALA
REVISED BY
DATE REVISED

LAST REVISION 00-00-00
DATE PLOTTED => 23-JUL-2013
TIME PLOTTED => 10:08

Dist	COUNTY	ROUTE	POST MILES TOTAL PROJECT	SHEET No.	TOTAL SHEETS
10	SJ	4,5	Var	100	486

REGISTERED CIVIL ENGINEER 12/24/12 DATE

7-22-13
PLANS APPROVAL DATE

REGISTERED PROFESSIONAL ENGINEER MARTHA M DADALA No. 66275 Exp. 6/30/2014 CIVIL STATE OF CALIFORNIA

THE STATE OF CALIFORNIA OR ITS OFFICERS OR AGENTS SHALL NOT BE RESPONSIBLE FOR THE ACCURACY OR COMPLETENESS OF SCANNED COPIES OF THIS PLAN SHEET.

RAJAPPAN & MEYER
CONSULTING ENGINEERS INC.
1038 LEIGH AVE, SUITE 100
SAN JOSE, CA 95126

SJCOG
555 E. WEBER AVE.
STOCKTON, CA 95202-2804

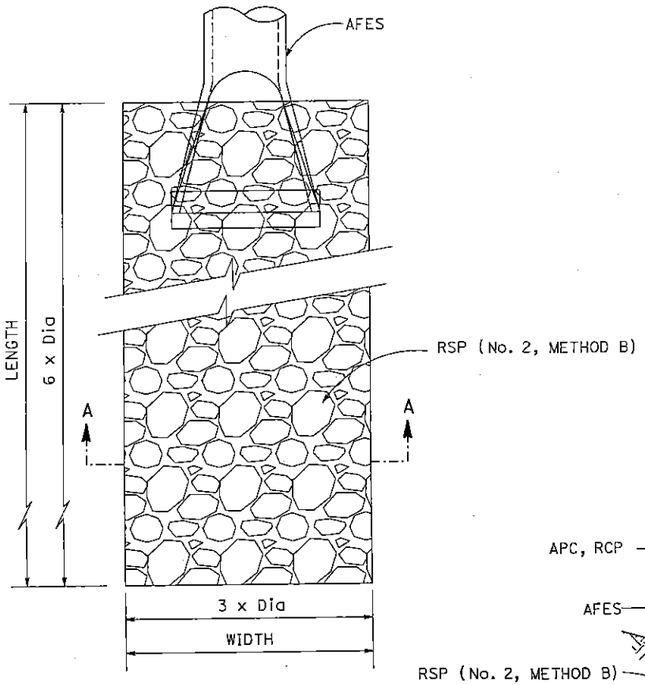

PLAN

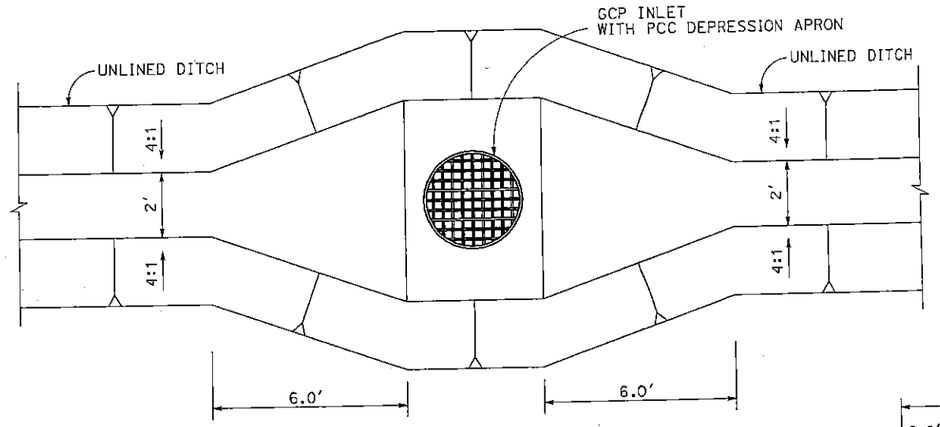

DITCH TO INLET TRANSITION

8 a c e
9 e

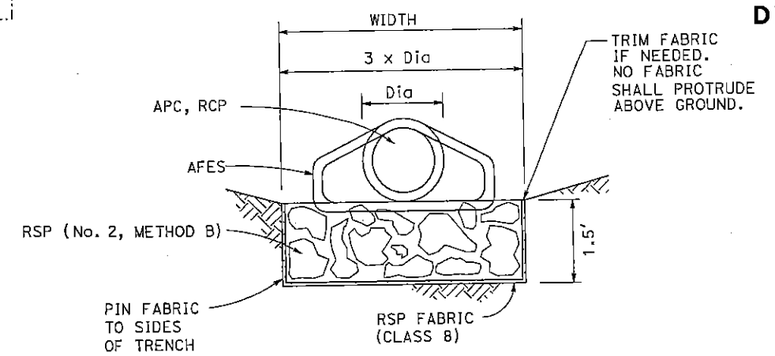

SECTION A-A

ROCK SLOPE PROTECTION AT CULVERT

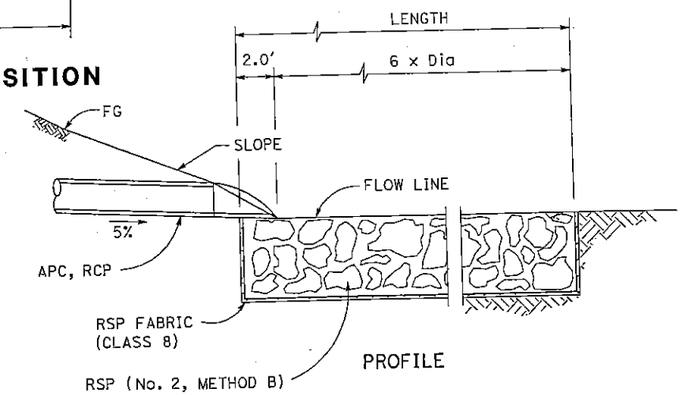

PROFILE

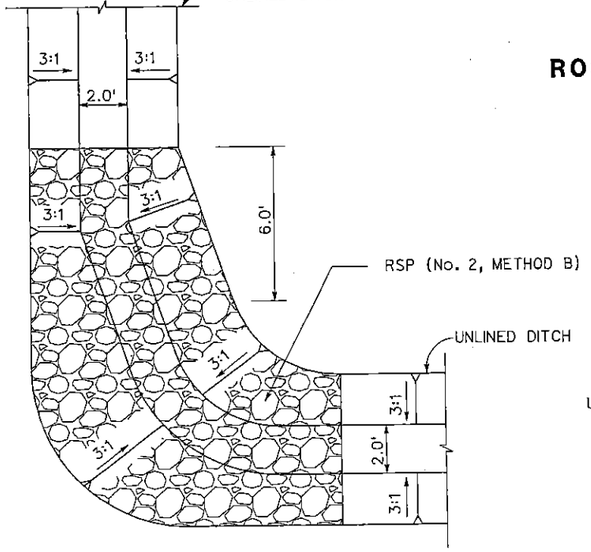

DITCH TRANSITION "L" SHAPE

8 j

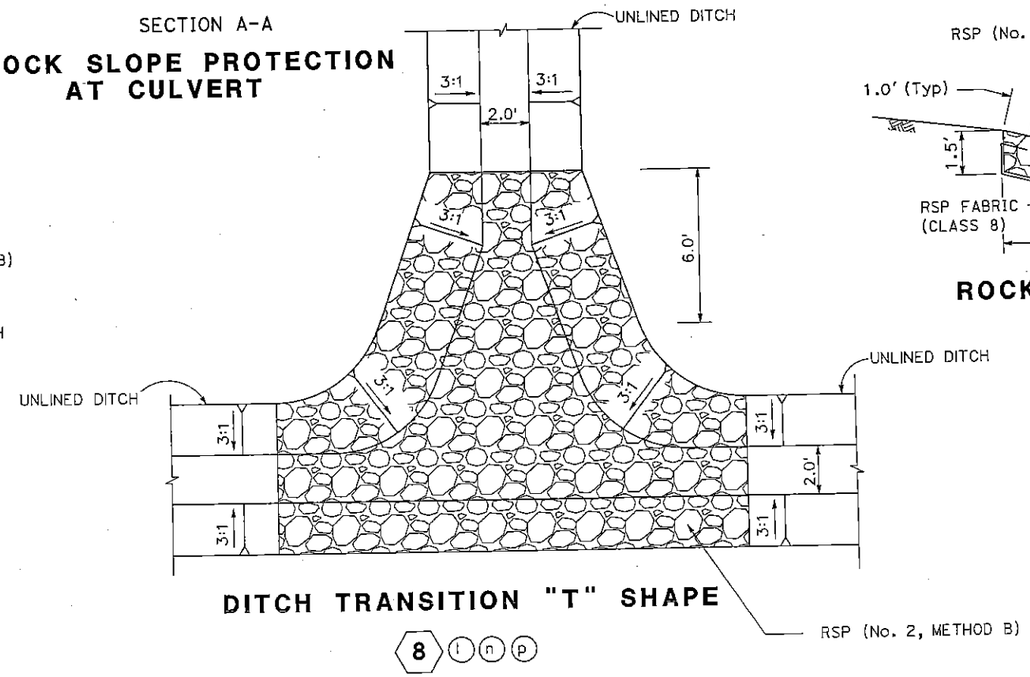

DITCH TRANSITION "T" SHAPE

8 l n p

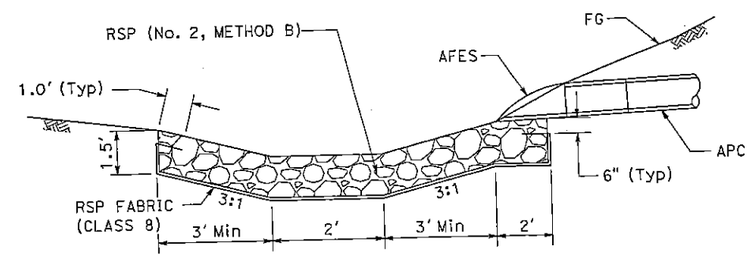

ROCK SLOPE PROTECTION AT DITCH

11 t
13 h

DRAINAGE DETAILS

NO SCALE

DD-2

REVISED BY	DATE REVISED
HUSAM ABURABI	MARTHA DADALA

CALCULATED-DESIGNED BY / CHECKED BY

CONSULTANT FUNCTIONAL SUPERVISOR: KEITH MEYER

STATE OF CALIFORNIA - DEPARTMENT OF TRANSPORTATION

Caltrans

TED => 23-JUL-2013
TTED => 10:08

LAST REVISION DA: 00-00-00 TIME

BORDER LAST REVISED 7/2/2010

USERNAME => s113946
DGN FILE => 10000002291c002.dgn

RELATIVE BORDER SCALE IS IN INCHES 0 1 2 3

UNIT 1455

PROJECT NUMBER & PHASE 10000002291

Dist	COUNTY	ROUTE	POST MILES TOTAL PROJECT	SHEET No.	TOTAL SHEETS
10	SJ	4,5	Var	101	486

REGISTERED CIVIL ENGINEER — DATE 12/24/12

PLANS APPROVAL DATE 7-22-13

REGISTERED PROFESSIONAL ENGINEER MARTHA M DADALA No. 66275 Exp. 6/30/2014 CIVIL STATE OF CALIFORNIA

THE STATE OF CALIFORNIA OR ITS OFFICERS OR AGENTS SHALL NOT BE RESPONSIBLE FOR THE ACCURACY OR COMPLETENESS OF SCANNED COPIES OF THIS PLAN SHEET.

RAJAPPAN & MEYER
CONSULTING ENGINEERS INC.
1038 LEIGH AVE, SUITE 100
SAN JOSE, CA 95126

SJCOG
555 E. WEBER AVE.
STOCKTON, CA 95202-2804

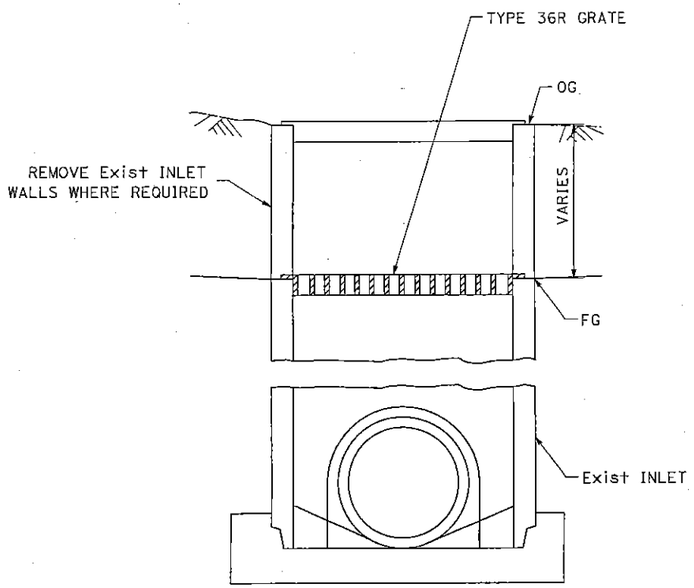

ADJUST INLET

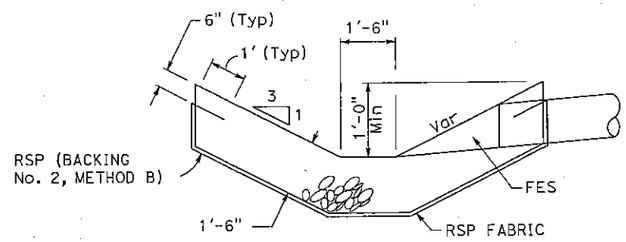

SECTION A-A

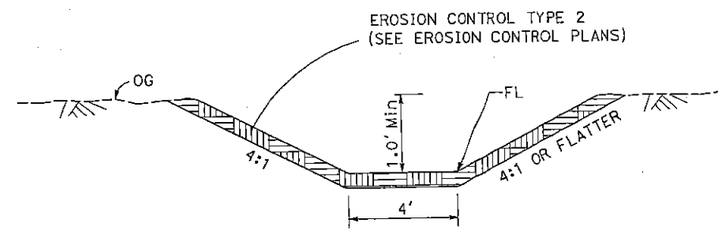

BIOFILTRATION SWALE TYPICAL SECTION

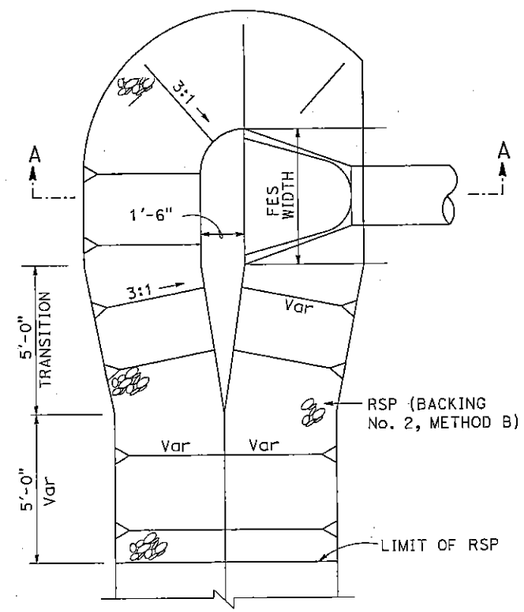

DITCH TRANSITION

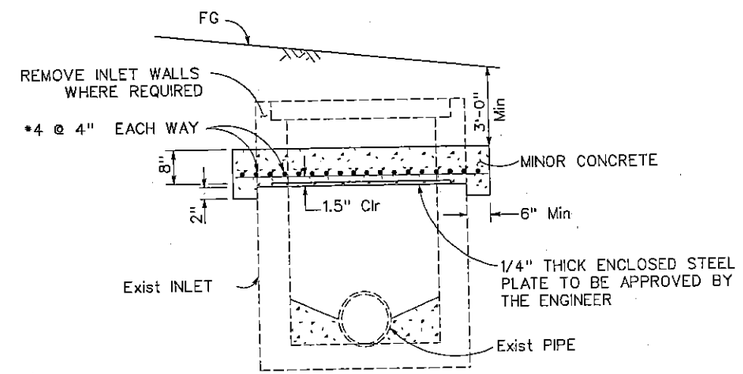

CAP INLET

14 9

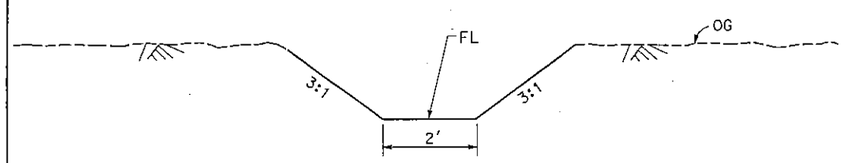

UNLINED DITCH TYPICAL SECTION

DRAINAGE DETAILS

NO SCALE

DD-3

STATE OF CALIFORNIA - DEPARTMENT OF TRANSPORTATION
Caltrans

CONSULTANT FUNCTIONAL SUPERVISOR: KEITH MEYER

CALCULATED-DESIGNED BY: HUSAM ABURABI
CHECKED BY: MARTHA DADALA

REVISED BY
DATE REVISED

LAST REVISION 00-00-00
DATE PLOTTED => 23-JUL-2013
TIME PLOTTED => 10:09

Dist	COUNTY	ROUTE	POST MILES TOTAL PROJECT	SHEET No.	TOTAL SHEETS
10	SJ	4,5	Var	102	486

REGISTERED CIVIL ENGINEER 12/24/12 DATE

7-22-13
PLANS APPROVAL DATE

REGISTERED PROFESSIONAL ENGINEER MICHAEL CONRAD No. 32921 Exp. 06/30/2014 CIVIL STATE OF CALIFORNIA

THE STATE OF CALIFORNIA OR ITS OFFICERS OR AGENTS SHALL NOT BE RESPONSIBLE FOR THE ACCURACY OR COMPLETENESS OF SCANNED COPIES OF THIS PLAN SHEET.

KJELDSEN, SINNOCK & NEUDECK, INC.
CIVIL ENGINEERS & LAND SURVEYORS
711 N. PERSHING AVENUE
STOCKTON, CA 95203

SJCOG
555 E. WEBER AVE.
STOCKTON, CA 95202-2804

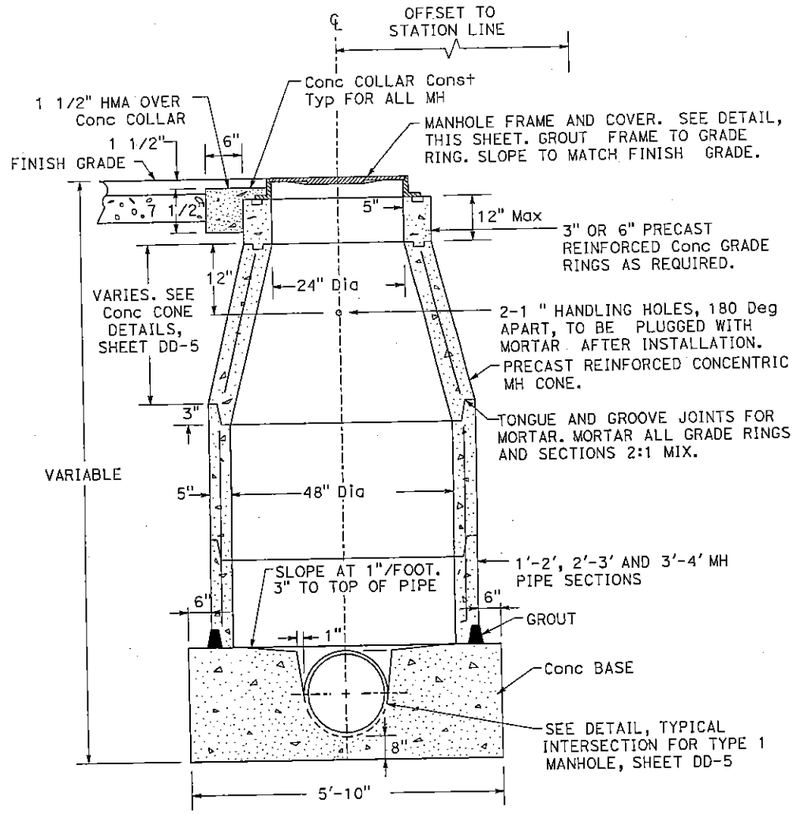

NOTES:

1. PRECAST Conc MH UNITS MUST CONFORM TO ASTM DESIGNATION C-478.
2. CONSTRUCT PIPE STUB JOINT, 2 FEET Min FROM BASE OF MH. ATTACH PIPE WITH FLEXIBLE RUBBER COUPLING.
3. PRIOR APPROVAL MUST BE OBTAINED BEFORE INSTALLING MORE THAN 12" GRADE RINGS.

CITY TYPE 1 SDMH

21 (e) (i) (o) (s) (w)

23 (c) (g) (k) (o) (u) (aa) (ee) (gg) (kk)

31 (c) (g) (o) (s) (u) (y)

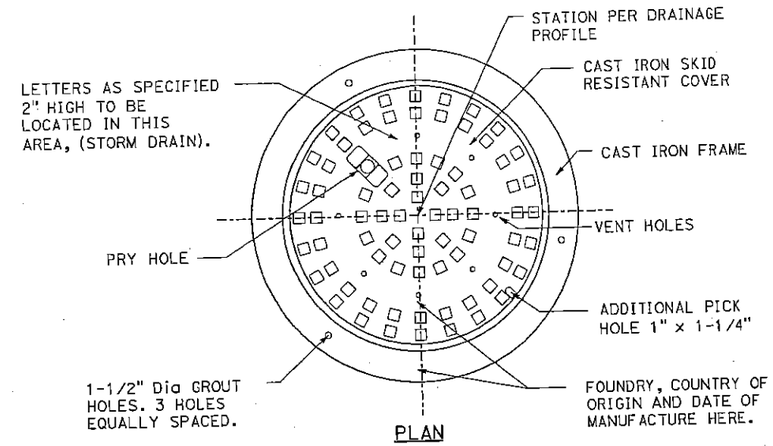

PLAN

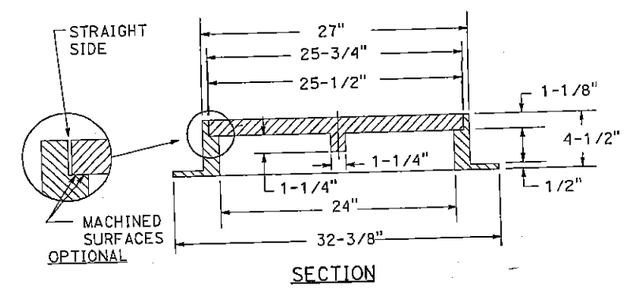

SECTION

NOTES:

1. COVER SHALL BE DESIGNED TO WITHSTAND HS-20 HIGHWAY LOADING.
2. FRAME AND COVER MUST BE FULLY MACHINED TO ASSURE INTER CHANGEABILITY AND A CLOSE QUIET FIT.
3. MH COVER FOR STORMWATER MH MUST HAVE 8 HOLES CORED IN THE COVER.

MANHOLE FRAME AND COVER

DRAINAGE DETAILS

NO SCALE

DD-4

REVISED BY	DATE REVISED
ELIZABETH REGAN	MICHAEL CONRAD

CALCULATED-DESIGNED BY / CHECKED BY

CONSULTANT FUNCTIONAL SUPERVISOR: STEPHEN SINNOCK

STATE OF CALIFORNIA - DEPARTMENT OF TRANSPORTATION

Caltrans

LAST REVISION 00-00-00 | DATE PLOTTED => 23-JUL-2013 | TIME PLOTTED => 10:09

Dist	COUNTY	ROUTE	POST MILES TOTAL PROJECT	SHEET No.	TOTAL SHEETS
10	SJ	4,5	Var	103	486

REGISTERED CIVIL ENGINEER 12/24/12 DATE

7-22-13
PLANS APPROVAL DATE

REGISTERED PROFESSIONAL ENGINEER MICHAEL CONRAD No. 32921 Exp. 06/30/2014 CIVIL STATE OF CALIFORNIA

THE STATE OF CALIFORNIA OR ITS OFFICERS OR AGENTS SHALL NOT BE RESPONSIBLE FOR THE ACCURACY OR COMPLETENESS OF SCANNED COPIES OF THIS PLAN SHEET.

KJELDSEN, SINNOCK & NEUDECK, INC.
CIVIL ENGINEERS & LAND SURVEYORS
711 N. PERSHING AVENUE
STOCKTON, CA 95203

SJCOG
555 E. WEBER AVE.
STOCKTON, CA 95202-2804

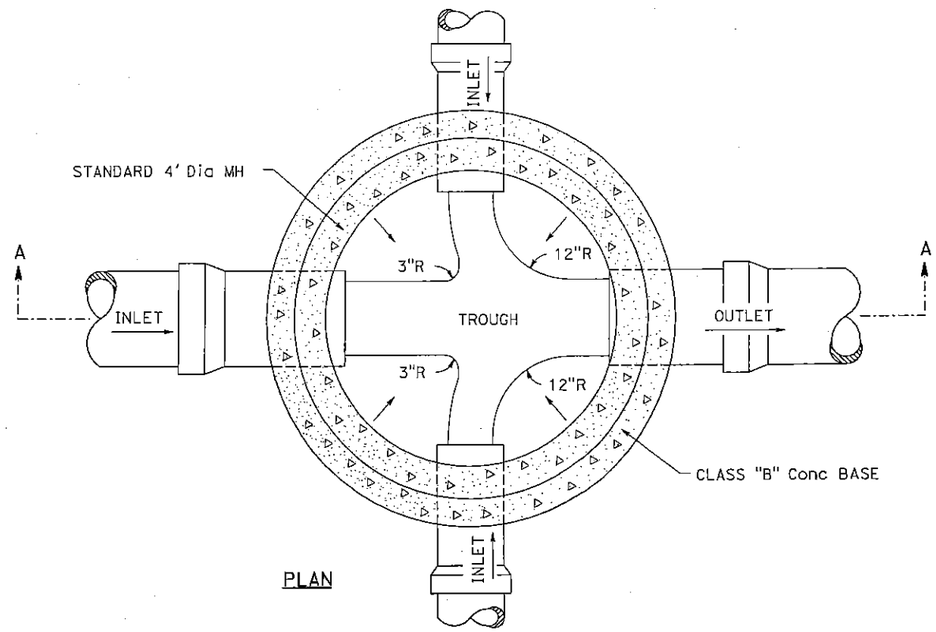

PLAN

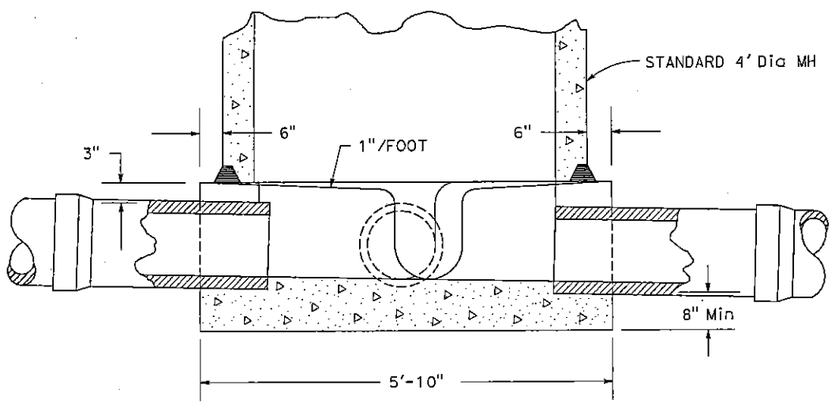

SECTION A-A

NOTES:

1. TROUGHS WITHIN MH TO BE FULLY ACCESSIBLE.
2. INLET PIPES NOT TO EXTEND MORE THAN 3" INTO MH.
3. OUTLET PIPE TO BE FLUSH AND ALL EDGES SMOOTH WITH MH WALL.
4. CONSTRUCT PIPE JOINTS AT 2' Max FROM BASE OF MH (FLEXIBLE JOINTS).
5. MH BOTTOM MUST BE HYDRAULICALLY SHAPED IN THE FIELD AS DIRECTED BY THE ENGINEER.

TYPICAL INTERSECTION FOR TYPE 1 MANHOLE

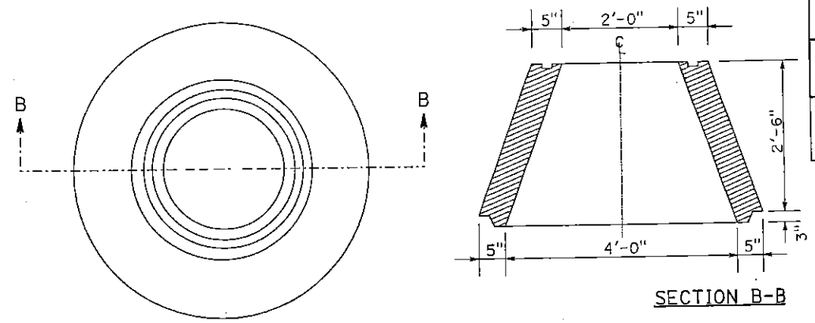

SECTION B-B

NOTE:

ALL HANDLING HOLES MUST BE PLUGGED WITH Conc MORTAR AFTER CONE INSTALLATION.

CITY OF STOCKTON STANDARD PRE-CAST Conc MANHOLE CONCENTRIC CONE

21 (i) (w)
23 (o) (gg) (kk)
31 (s) (u)

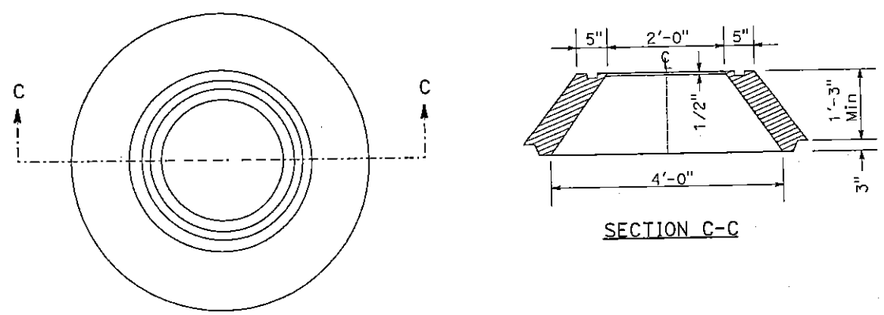

SECTION C-C

NOTE:

ALL HANDLING HOLES MUST BE PLUGGED WITH Conc MORTAR AFTER CONE INSTALLATION.

CITY OF STOCKTON STANDARD PRE-CAST Conc MANHOLE CONCENTRIC SHORT CONE

21 (e) (o) (s)
23 (c) (g) (k) (u) (aa) (ee)
31 (c) (g) (o) (y)

DRAINAGE DETAILS

NO SCALE

DD-5

STATE OF CALIFORNIA - DEPARTMENT OF TRANSPORTATION
Caltrans

CONSULTANT FUNCTIONAL SUPERVISOR: STEPHEN SINNOCK
CALCULATED-DESIGNED BY: ELIZABETH REGAN
CHECKED BY: MICHAEL CONRAD
REVISED BY
DATE REVISED

LAST REVISION 00-00-00 | DATE PLOTTED => 23-JUL-2013 | TIME PLOTTED => 10:09

Dist	COUNTY	ROUTE	POST MILES TOTAL PROJECT	SHEET No.	TOTAL SHEETS
10	SJ	4,5	Var	104	486

REGISTERED CIVIL ENGINEER 12/24/12 DATE

7-22-13
PLANS APPROVAL DATE

REGISTERED PROFESSIONAL ENGINEER MICHAEL CONRAD No. 32921 Exp. 06/30/2014 CIVIL STATE OF CALIFORNIA

THE STATE OF CALIFORNIA OR ITS OFFICERS OR AGENTS SHALL NOT BE RESPONSIBLE FOR THE ACCURACY OR COMPLETENESS OF SCANNED COPIES OF THIS PLAN SHEET.

KJELDSEN, SINNOCK & NEUDECK, INC.
CIVIL ENGINEERS & LAND SURVEYORS
711 N. PERSHING AVENUE
STOCKTON, CA 95203

SJCOG
555 E. WEBER AVE.
STOCKTON, CA 95202-2804

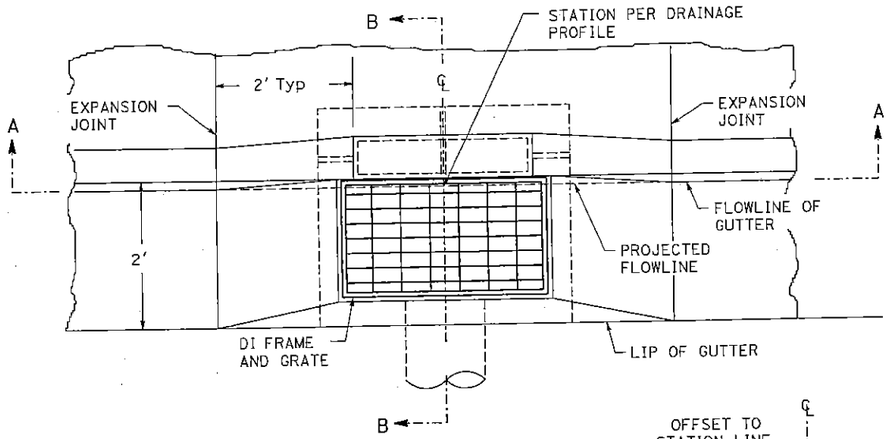

PLAN

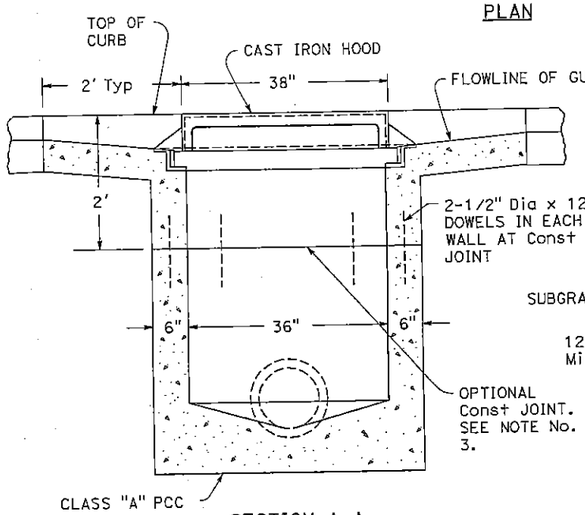

SECTION A-A

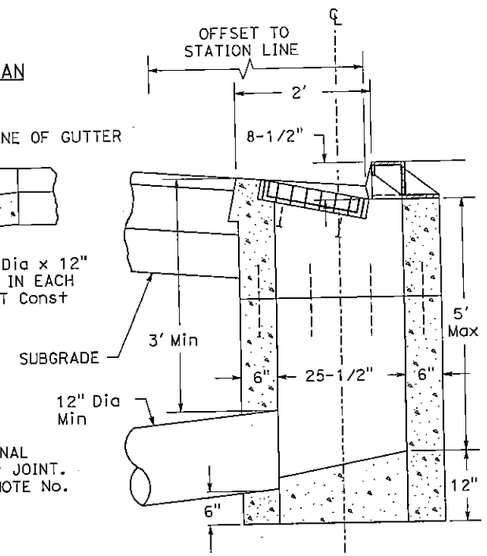

SECTION B-B

NOTES:

1. PRECAST Conc CATCHBASIN MAY BE USED WITH THE WRITTEN APPROVAL OF THE ENGINEER.
2. CATCHBASIN WALLS MAY BE POURED TO AN ELEVATION NOT LESS THAN 2' BELOW TOP OF CURB. IT SHALL BE THE RESPONSIBILITY OF THE CONTRACTOR TO FRAME IN AND POUR THE UPPER 2' OF THE CATCHBASIN MONOLITHICALLY WITH THE CURB AND GUTTER.
3. ALL EXPOSED STEEL SHALL BE COATED WITH 2 COATS OF COAL TAR PITCH HEATED TO A Min OF 180 Degree Fahrenheit OR GALVANIZED.
4. THIS CATCHBASIN TO BE INSTALLED IN INDUSTRIAL AND COMMERCIAL AREAS AS DIRECTED BY THE ENGINEER.
5. CAST IRON HOOD MUST CONFORM TO DETAIL ON SHEET DD-7. DI FRAME AND GRATE MUST CONFORM TO DETAIL ON SHEET DD-7.

CITY TYPE 2 DI

18 (a)
21 (a)(c)(g)(k)(u)
23 (a)(e)(i)(m)(q)(y)(ii)
31 (k)(q)(w)
36 (e)
37 (e)

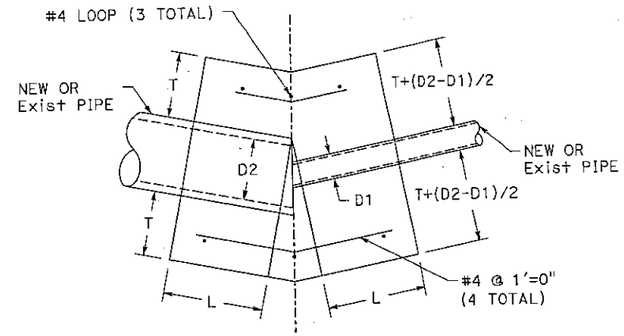

NOTES:

1. WHERE PIPES OF DIFFERENT DIAMETERS ARE JOINED WITH A CONCRETE COLLAR, L AND T MUST BE THOSE OF THE LARGER PIPE. D = D1 OR D2, WHICHEVER IS GREATER, SUCH THAT D2+2*T = D1+2*(T+(D2-D1)/2).
2. WHEN D1 IS EQUAL OR LESS THAN D2, JOIN INVERTS. WHEN D1 IS GREATER THAN D2, JOIN SOFFITS.
3. FOR PIPE SIZES NOT LISTED USE NEXT LARGER SIZE.

D	L	T
12"	12"	6"
18"	12"	6"

CONCRETE COLLAR

31 (e)(i)(m)
36 (c)
37 (c)

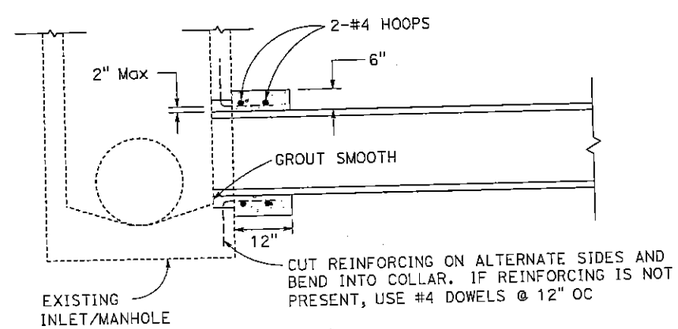

PIPE CONNECTION TO EXISTING DRAINAGE STRUCTURE

18 (c)

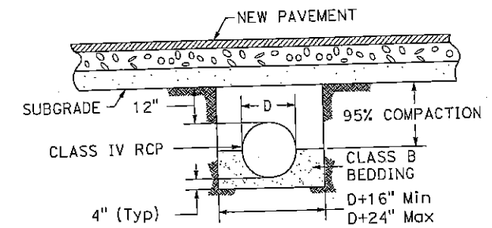

NOTES:

1. SUBGRADE MUST BE EXCAVATED OR OVEREXCAVATED, IF NECESSARY, SO A UNIFORM FOUNDATION FREE OF PROTRUDING ROCKS IS PROVIDED.
2. THIS PIPE BEDDING DETAIL IS APPLICABLE TO STABLE SOIL CONDITIONS ONLY.
3. CONTROLLED DENSITY FILL (CDF) MAY BE USED IN LIEU OF SPECIFIED BACKFILL METHOD. Min TRENCH WIDTH MAY BE REDUCED TO 2-1/2" CLEAR OF EACH SIDE OF PIPE.
4. DRAINAGE PIPES LOCATED WITHIN THE CITY OF STOCKTON RIGHT OF WAY MUST CONFORM TO ASTM DESIGNATION C-76.

TRENCH SECTION (NEW STREETS) AND PIPE CLASS WITHIN CITY OF STOCKTON RIGHT OF WAY

18 (b)
21 (b)(d)(f)(j)(l)(n)(p)(r)(t)(v)(x)
23 (b)(d)(f)(h)(j)(l)(n)(p)(r)(t)(v)(x)(z)(bb)(dd)(ff)(hh)(jj)(ll)
31 (b)(d)(f)(h)(j)(l)(n)(p)(r)(t)(v)(x)(z)
35 (b)
36 (d)
37 (d)

DRAINAGE DETAILS

NO SCALE

DD-6

REVISED BY | DATE REVISED
ELIZABETH REGAN | MICHAEL CONRAD
CALCULATED-DESIGNED BY | CHECKED BY
CONSULTANT FUNCTIONAL SUPERVISOR: STEPHEN SINNOCK
STATE OF CALIFORNIA - DEPARTMENT OF TRANSPORTATION
Caltrans

LAST REVISION 00-00-00 | DATE PLOTTED => 23-JUL-2013 | TIME PLOTTED => 10:09

Dist	COUNTY	ROUTE	POST MILES TOTAL PROJECT	SHEET No.	TOTAL SHEETS
10	SJ	4,5	Var	105	486

REGISTERED CIVIL ENGINEER 12/24/12 DATE

7-22-13
PLANS APPROVAL DATE

REGISTERED PROFESSIONAL ENGINEER MICHAEL CONRAD No. 32921 Exp. 06/30/2014 CIVIL STATE OF CALIFORNIA

THE STATE OF CALIFORNIA OR ITS OFFICERS OR AGENTS SHALL NOT BE RESPONSIBLE FOR THE ACCURACY OR COMPLETENESS OF SCANNED COPIES OF THIS PLAN SHEET.

KJELDSEN, SINNOCK & NEUDECK, INC.
CIVIL ENGINEERS & LAND SURVEYORS
711 N. PERSHING AVENUE
STOCKTON, CA 95203

SJCOG
555 E. WEBER AVE.
STOCKTON, CA 95202-2804

NOTES:

MESSAGE AND SYMBOL LETTERS MUST BE 1 1/2 INCHES IN HEIGHT. OUTSIDE DIMENSION OF PUBLIC NOTICE BACKGROUND SHALL FIT BACK OF INLET OR BE PLACED IN SIDEWALK IMMEDIATELY BEHIND INLET. LETTERING AND GRAPHIC SHALL BE BLACK WITH GRAY BACKGROUND UNLESS APPROVED BY THE ENGINEER.

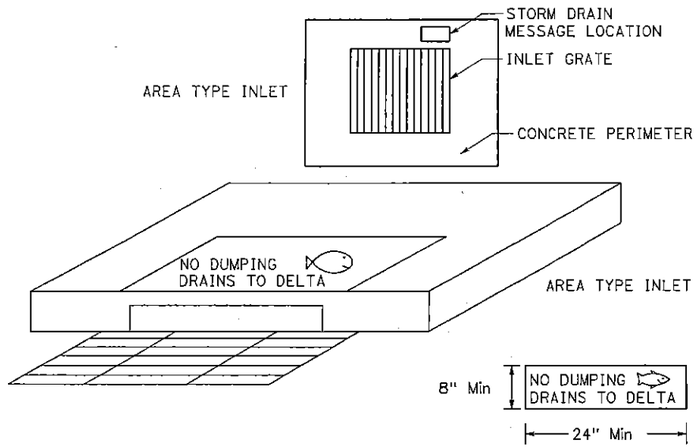

STORM DRAIN INLET MARKER DETAIL

⟨18⟩ (a)

⟨21⟩ (a)(c)(g)(k)(m)(q)(u)

⟨23⟩ (a)(e)(l)(m)(q)(s)(w)(y)(cc)(ii)

⟨31⟩ (k)(q)(w)

⟨36⟩ (e)

⟨37⟩ (e)

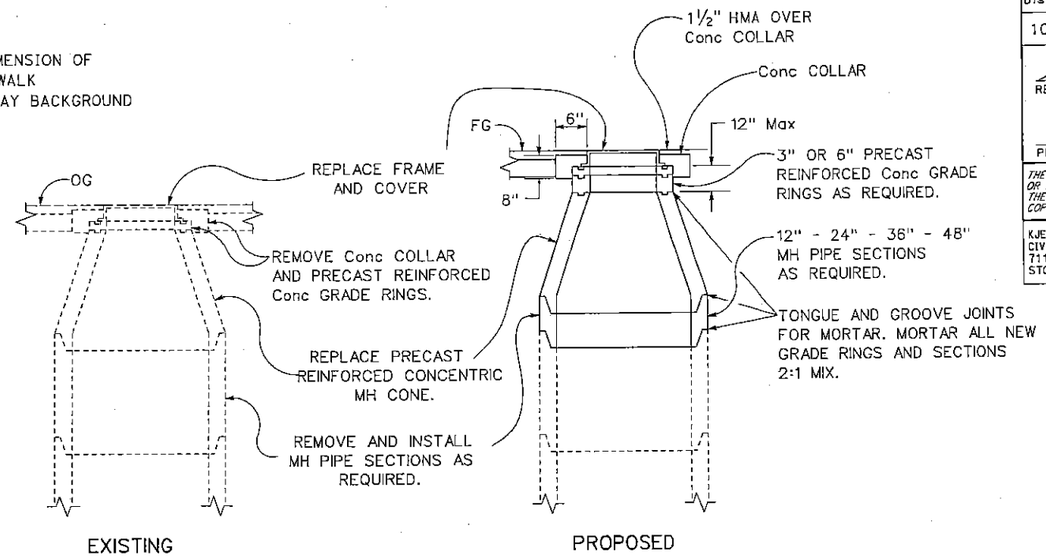

ADJUST SDMH TO GRADE

⟨16⟩ (b)(c)

⟨18⟩ (c)

⟨19⟩ (a)

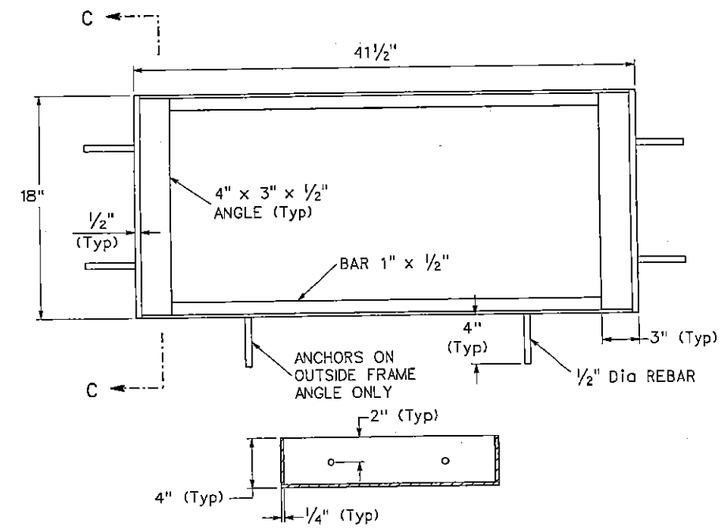

SECTION C-C

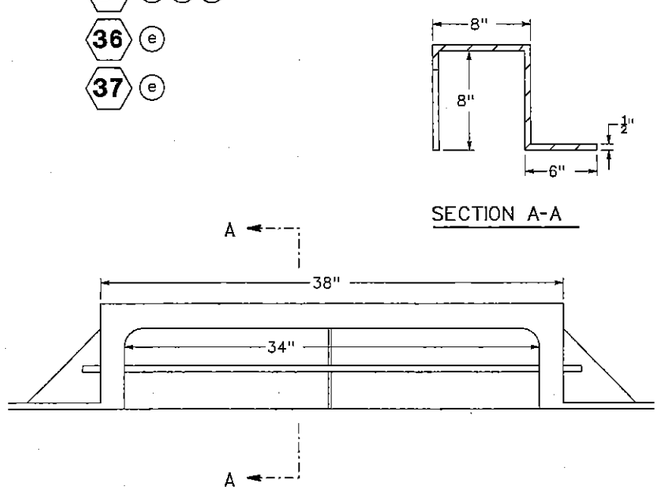

SECTION A-A

NOTE:

HOOD MUST BE CAST IRON.

CAST IRON HOOD

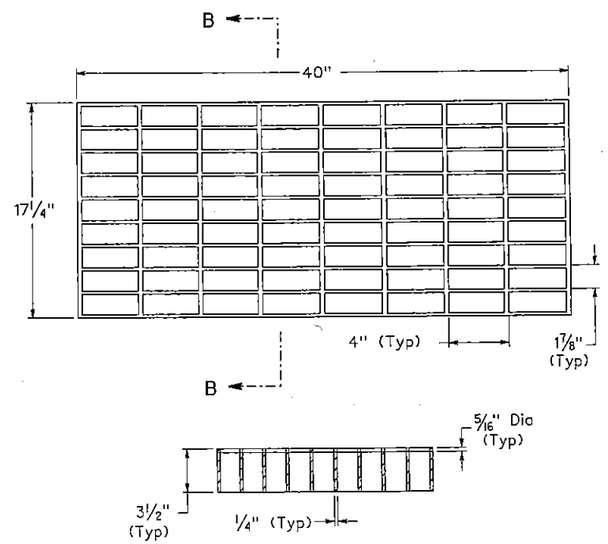

SECTION B-B

NOTE:

FRAME AND GRATE MUST HAVE CHAIN AND BLACK FINISH.

DI FRAME AND GRATE

DRAINAGE DETAILS

NO SCALE

DD-7

STATE OF CALIFORNIA - DEPARTMENT OF TRANSPORTATION
Caltrans

CONSULTANT FUNCTIONAL SUPERVISOR: STEPHEN SINNOCK

CALCULATED-DESIGNED BY: ELIZABETH REGAN
CHECKED BY: MICHAEL CONRAD
REVISED BY
DATE REVISED

LAST REVISION 00-00-00
DATE PLOTTED => 23-JUL-2013
TIME PLOTTED => 10:09

Dist	COUNTY	ROUTE	POST MILES TOTAL PROJECT	SHEET No.	TOTAL SHEETS
10	SJ	4,5	Var	106	486

REGISTERED CIVIL ENGINEER 12/24/12 DATE

7-22-13
PLANS APPROVAL DATE

REGISTERED PROFESSIONAL ENGINEER MARTHA M DADALA No. 66275 Exp. 6/30/2014 CIVIL STATE OF CALIFORNIA

THE STATE OF CALIFORNIA OR ITS OFFICERS OR AGENTS SHALL NOT BE RESPONSIBLE FOR THE ACCURACY OR COMPLETENESS OF SCANNED COPIES OF THIS PLAN SHEET.

RAJAPPAN & MEYER
CONSULTING ENGINEERS INC.
1038 LEIGH AVE, SUITE 100
SAN JOSE, CA 95126

SJCOG
555 E. WEBER AVE.
STOCKTON, CA 95202-2804

NOTES:

1. (N) NOT A SEPARATE PAY ITEM, FOR INFORMATION ONLY.
2. ALL RCP PIPES SHALL HAVE RGJ.

ABBREVIATIONS:

SJT	STANDARD JOINT TYPE
RGJ	RUBBER GASKET JOINT
BCI	BITUMINOUS COATING & PAVED INVERT
PA	POLYMERIZED ASPHALT
PS	POLYMERIC SHEET
SGD	STANDARD GUTTER DEPRESSION
SDMH	STORM DRAIN MANHOLE

ALLOWABLE ALTERNATIVE PIPES AND ALTERNATIVE FLARED END SECTIONS:

DESIGNATION SIZE	CSP (1)		CSP (2)		SSRP (3)		SSRP (4)		PLASTIC PIPE (5)
	THICKNESS	COAT	THICKNESS	COAT	THICKNESS	COAT	THICKNESS	COAT	SIZE
12" APC	0.052"	PA/PS	-	PA/PS	-	-	-	-	12"
18" APC	0.052"	PA/PS	0.064"	PA/PS	-	-	-	-	18"
24" APC	0.052"	PA/PS	0.064"	PA/PS	0.109"/0.064"	BCI/PA/PS	0.109"/0.064"	BCI/PA/PS	24"

(1) HELICAL CORRUGATION - 2 2/3"x1/2".
(2) HELICAL ANNULAR WITH - 2 2/3"x1/2".
(3) 3/4"x1" RIBS AT 11 1/2" PITCH.
(4) 3/4"x3/4" RIBS AT 7 1/2" PITCH.
(5) PLASTIC PIPE TYPE DEPENDENT ON HEIGHT OF FILL, AVAILABLE SIZES AND MANUFACTURER'S SPECIFICATIONS. USE WATER TIGHT JOINT WHEN SELECTING PLASTIC PIPE.

DRAINAGE QUANTITIES

DRAINAGE PLAN SHEET No.	DRAINAGE SYSTEM No.	DRAINAGE UNIT	REMOVE CULVERT	REMOVE INLET	CAP INLET	ADJUST INLET	APC 18"	APC 24"	DITCH EXCAVATION	AFES 18"	AFES 24"	PIPE JOINT CLASSIFICATION (N)	PIPE ELBOW (N)	36" PRECAST Conc PIPE INLET	Misc IRON AND STEEL	(N) FRAME, GRATE & COVER TYPE 24-12	(N) FRAME, GRATE & COVER TYPE 36R	MINOR CONCRETE (MINOR STRUCTURE)	MINOR CONCRETE (Misc CONSTRUCTION)	RSP (No. 2, METHOD B)	RSP FABRIC (CLASS B)	DESIGN H (N)	MAXIMUM COVER (N)	DESCRIPTION	STATION	DRAINAGE PLAN SHEET No.	DRAINAGE SYSTEM No.	DRAINAGE UNIT
			LF	EA		EA	LF		CY	EA			EA	LF	LB	EA		CY		CY	SQYD	LF	LF					
D-1	1	a													326	1		0.95	1.95			3.0		TYPE G1 DI w/ 1.25" SGD	"NY" LINE 43+66.85 80.54' Lt	D-1	1	a
		b					45.8					SJT	2										1.0	18" APC	"NY" LINE 43+66.85 80.54' Lt			b
		c								1														18" AFES	"NY" LINE 44+03.18 116.10' Lt			c
D-1	1	d																		2.8	10.4			11' x 4.5' x 1.5' RSP	"NY" LINE 44+03.18 116.10' Lt	D-1	1	d
D-1	2	a													326	1		1.19	1.14			4.1		TYPE G1 DI w/ 1.25" SGD	"NA" LINE 872+23.73 80.62' Lt	D-1	2	a
		b					53.5					SJT	2										1.0	18" APC	"NA" LINE 872+23.73 80.62' Lt			b
		c								1														18" AFES	"NA" LINE 872+53.07 127.30' Lt			c
D-1	2	d																		2.8	10.4			11' x 4.5' x 1.5' RSP	"NA" LINE 872+53.07 127.30' Lt	D-1	2	d
D-1	3	a													326	1		1.13	1.14			3.8		TYPE G1 DI w/ 1.25" SGD	"NA" LINE 872+91.73 2.00' Lt	D-1	3	a
		b					56.8					SJT											1.0	18" APC	"NA" LINE 872+91.73 2.00' Lt			b
		c													326	1		1.08	1.14			3.6		TYPE G1 DI w/ 1.25" SGD	"NA" LINE 872+91.15 56.82' Rt			c
		d					42.2					SJT											1.0	18" APC	"NA" LINE 872+91.15 56.82' Rt			d
		e								1														18" AFES	"NA" LINE 873+00.08 90.06' Rt			e
D-1	3	f																		2.8	10.4			11' x 4.5' x 1.5' RSP	"NA" LINE 873+00.08 90.06' Rt	D-1	3	f
D-1	4	a									1													24" AFES	"NA" LINE 872+98.19 114.85' Lt	D-1	4	a
		b																		4.7	15.6			14' x 6' x 1.5' RSP	"NA" LINE 872+98.19 114.85' Lt			b
		c						194.4																24" APC	"NA" LINE 872+98.19 114.85' Lt			c
		d									1													24" AFES	"NA" LINE 873+23.70 85.03' Rt			d
D-1	4	e																		4.7	15.6			14' x 6' x 1.5' RSP	"NA" LINE 873+23.70 85.03' Rt	D-1	4	e
D-1	5	a													326	1		1.10	1.14			3.7		TYPE G1 DI w/ 1.25" SGD	"NA" LINE 874+50.00 2.00' Lt	D-1	5	a
		b					56.5					SJT											1.0	18" APC	"NA" LINE 874+50.00 2.00' Lt			b
		c													326	1		1.10	1.95			3.7		TYPE G1 DI w/ 1.25" SGD	"NA" LINE 874+50.00 57.17' Rt			c
		d					31.5					SJT											1.0	18" APC	"NA" LINE 874+50.00 57.17' Rt			d
		e									1													18" AFES	"NA" LINE 874+50.00 88.81' Rt			e
D-1	5	f																		4.7	15.6			14' x 6' x 1.5' RSP	"NA" LINE 874+50.00 88.81' Rt	D-1	5	f
SHEET TOTAL							286.3	194.4		3	3		4		1956	6		6.55	8.46	22.5	78.0							

DRAINAGE QUANTITIES
DQ-1

STATE OF CALIFORNIA - DEPARTMENT OF TRANSPORTATION
Caltrans

CONSULTANT FUNCTIONAL SUPERVISOR: KEITH MEYER
CALCULATED-DESIGNED BY: HUSAM ABURABI
CHECKED BY: MARTHA DADALA
REVISED BY
DATE REVISED

LAST REVISION 00-00-00
DATE PLOTTED => 23-JUL-2013
TIME PLOTTED => 08:31

Dist	COUNTY	ROUTE	POST MILES TOTAL PROJECT	SHEET No.	TOTAL SHEETS
10	SJ	4,5	Var	107	486

REGISTERED CIVIL ENGINEER 12/24/12 DATE

7-22-13
PLANS APPROVAL DATE

REGISTERED PROFESSIONAL ENGINEER MARTHA M DADALA No. 66275 Exp. 6/30/2014 CIVIL STATE OF CALIFORNIA

THE STATE OF CALIFORNIA OR ITS OFFICERS OR AGENTS SHALL NOT BE RESPONSIBLE FOR THE ACCURACY OR COMPLETENESS OF SCANNED COPIES OF THIS PLAN SHEET.

RAJAPPAN & MEYER
CONSULTING ENGINEERS INC.
1038 LEIGH AVE, SUITE 100
SAN JOSE, CA 95126

SJCOG
555 E. WEBER AVE.
STOCKTON, CA 95202-2804

DRAINAGE QUANTITIES

DRAINAGE PLAN SHEET No.	DRAINAGE SYSTEM No.	DRAINAGE UNIT	REMOVE CULVERT (LF)	REMOVE INLET (EA)	CAP INLET (EA)	ADJUST INLET (EA)	APC 18" (LF)	APC 24" (LF)	DITCH EXCAVATION (CY)	AFES 18" (EA)	AFES 24" (EA)	PIPE JOINT CLASSIFICATION (N)	PIPE ELBOW (N) (EA)	36" PRECAST Conc PIPE INLET (LF)	Misc IRON AND STEEL (LB)	(N) FRAME, GRATE & COVER TYPE 24-12 (EA)	(N) FRAME, GRATE & COVER TYPE 36R (EA)	MINOR CONCRETE (MINOR STRUCTURE) (CY)	MINOR CONCRETE (Misc CONSTRUCTION) (CY)	RSP (No. 2, METHOD B) (CY)	RSP FABRIC (CLASS 8) (SQYD)	DESIGN H (N) (LF)	MAXIMUM COVER (N) (LF)	DESCRIPTION	STATION	DRAINAGE PLAN SHEET No.	DRAINAGE SYSTEM No.	DRAINAGE UNIT
D-1	6	a																		2.8	10.4			11' x 4.5' x 1.5' RSP	"NA" LINE 874+90.54 123.87 L+	D-1	6	a
D-1									7.5															UNLINED DITCH	"NA" LINE 874+90.54 123.87 L+	D-1		
D-2	7	a													326	1		1.06	1.14			3.5		TYPE G1 DI w/ 1.25" SGD	"NA1" LINE 882+21.13 34.00' L+	D-2	7	a
		b					33.3					SJT											2.0	18" APC	"NA1" LINE 882+21.13 34.00' L+			b
		c													326	1		2.48	1.14			7.6		TYPE G2 DI w/ 1.25" SGD	"NA1" LINE 882+18.16 4.23' R+			c
		d													326	1		1.26	1.14			4.4		TYPE G1 DI w/ 1.25" SGD	"NA2" LINE 882+01.80 32.00' R+			d
		e					34.5					SJT											2.0	18" APC	"NA2" LINE 882+01.80 32.00' R+			e
D-2	7	f						255.2				SJT											2.0	18" APC	"NA1" LINE 882+18.16 4.23' R+	D-2	7	f
D-1	7	g													326	1		1.44	1.14			3.5		TYPE G1 DI w/ 1.25" SGD	"NA" LINE 879+42.00 45.27' L+	D-1	7	g
		h					37.8					SJT											2.0	18" APC	"NA" LINE 879+42.00 45.27' L+			h
		i													326	1		1.95	1.14			5.5		TYPE G2 DI w/ 1.25" SGD	"NA" LINE 879+40.00 5.00' L+			i
		j													326	1		1.08	1.14			3.6		TYPE G1 DI w/ 1.25" SGD	"NA" LINE 879+40.47 44.60' R+			j
		k					42.2					SJT											2.0	18" APC	"NA" LINE 879+40.47 44.60' R+			k
		l						234.2				SJT											2.0	24" APC	"NA" LINE 879+40.00 5.00' L+			l
		m													326	1		1.41	1.14			5.1		TYPE G2 DI w/ 1.25" SGD	"NA" LINE 877+00.00 3.98' L+			m
		n						50.7				SJT											2.0	24" APC	"NA" LINE 877+00.00 3.98' L+			n
		o													326	1		2.36	1.14			7.1		TYPE G2 DI w/ 1.25" SGD	"NA" LINE 877+00.38 52.12' R+			o
		p						66.8				SJT											2.0	24" APC	"NA" LINE 877+00.38 52.12' R+			p
		q									1													24" AFES	"NA" LINE 877+00.00 110.26' R+			q
D-1		r																		4.7	15.6			14' x 6' x 1.5' RSP	"NA" LINE 877+00.00 110.26' R+	D-1		r
D-2		s																		4.7	15.6			14' x 6' x 1.5' RSP	"NA1" LINE 882+66.00 34.50' L+	D-2		s
D-2	7	t																		4.7	15.6			14' x 6' x 1.5' RSP	"NA2" LINE 882+46.00 4.00' L+	D-2	7	t
D-2									17.7															UNLINED DITCH	"NA1" LINE 882+66.00 34.50' L+	D-2		
D-2									16.1															UNLINED DITCH	"NA2" LINE 882+46.00 41.50' L+	D-2		
D-2									2.9															UNLINED DITCH	"NA2" LINE 881+63.00 46.50' R+	D-2		
SHEET TOTAL							147.8	606.9	44.2		1				2608	8		13.04	9.12	16.9	57.2							

DRAINAGE QUANTITIES
DQ-2

REVISED BY | DATE REVISED
HUSAM ABURABI | MARTHA DADALA
CALCULATED-DESIGNED BY | CHECKED BY
CONSULTANT FUNCTIONAL SUPERVISOR: KEITH MEYER
STATE OF CALIFORNIA - DEPARTMENT OF TRANSPORTATION
Caltrans

LAST REVISION 00-00-00 | DATE PLOTTED => 23-JUL-2013 | TIME PLOTTED => 08:31

Dist	COUNTY	ROUTE	POST MILES TOTAL PROJECT	SHEET No.	TOTAL SHEETS
10	SJ	4,5	Var	108	486

REGISTERED CIVIL ENGINEER 12/24/12 DATE

7-22-13
PLANS APPROVAL DATE

REGISTERED PROFESSIONAL ENGINEER MARTHA M DADALA No. 66275 Exp. 6/30/2014 CIVIL STATE OF CALIFORNIA

THE STATE OF CALIFORNIA OR ITS OFFICERS OR AGENTS SHALL NOT BE RESPONSIBLE FOR THE ACCURACY OR COMPLETENESS OF SCANNED COPIES OF THIS PLAN SHEET.

RAJAPPAN & MEYER
CONSULTING ENGINEERS INC.
1038 LEIGH AVE, SUITE 100
SAN JOSE, CA 95126

SJCOG
555 E. WEBER AVE.
STOCKTON, CA 95202-2804

DRAINAGE QUANTITIES

DRAINAGE PLAN SHEET No.	DRAINAGE SYSTEM No.	DRAINAGE UNIT	REMOVE CULVERT (LF)	REMOVE INLET (EA)	CAP INLET (EA)	ADJUST INLET (EA)	APC 18" (LF)	APC 24" (LF)	DITCH EXCAVATION (CY)	AFES 18" (EA)	AFES 24" (EA)	PIPE JOINT CLASSIFICATION (N)	PIPE ELBOW (N) (EA)	36" PRECAST Conc PIPE INLET (LF)	Misc IRON AND STEEL (LB)	(N) FRAME, GRATE & COVER TYPE 24-12 (EA)	(N) FRAME, GRATE & COVER TYPE 36R (EA)	MINOR CONCRETE (MINOR STRUCTURE) (CY)	MINOR CONCRETE (Misc CONSTRUCTION) (CY)	RSP (No. 2, METHOD B) (CY)	RSP FABRIC (CLASS 8) (SQYD)	DESIGN H (N) (LF)	MAXIMUM COVER (N) (LF)	DESCRIPTION	STATION	DRAINAGE PLAN SHEET No.	DRAINAGE SYSTEM No.	DRAINAGE UNIT
D-3	8	a												2.5	236		1		1.20			2.0		TYPE GCP DI w/ APRON	"A4" LINE 898+65.00 36.75' Rt	D-3	8	a
↕	↕	b					232.0					SJT											1.0	18" APC	"A4" LINE 898+65.00 36.75' Rt	↕	↕	b
		c												4.2	236		1		1.20			3.7		TYPE GCP DI w/ APRON	"A4" LINE 901+00.00 36.75' Rt			c
D-3	8	d					305.9					SJT											1.0	18" APC	"A4" LINE 901+00.00 36.75' Rt	D-3	8	d
D-4	8	e												6.1	236		1		1.20			5.6		TYPE GCP DI w/ APRON	"A4" LINE 904+09.11 36.53' Rt	D-4	8	e
↕	↕	f					88.0					SJT											1.0	18" APC	"A4" LINE 904+09.11 36.53' Rt	↕	↕	f
		g								1														18" AFES	"A4" LINE 904+94.95 62.48' Rt			g
D-4	8	h																		4.7	15.6			14' x 6' x 1.5' RSP	"A4" LINE 904+94.95 62.48' Rt	D-4	8	h
D-3	8	i																		4.7	15.6			14' x 6' x 1.5' RSP	"A3" LINE 895+77.00 37.00' Lt	D-3	8	i
↕	↕								38.1															UNLINED DITCH	"A3" LINE 895+77.00 37.00' Lt	↕	↕	
		j																		4.7	15.6			14' x 6' x 1.5' RSP	"A4" LINE 895+77.00 45.50' Rt			j
		k																		4.7	15.6			14' x 6' x 1.5' RSP	"A3" LINE 897+31.00 37.00' Lt			k
									99.5															UNLINED DITCH	"A3" LINE 897+31.00 37.00' Lt			
		l																		4.7	15.6			14' x 6' x 1.5' RSP	"A4" LINE 897+31.00 45.40' Rt			l
		m																		4.7	15.6			14' x 6' x 1.5' RSP	"A3" LINE 899+79.00 37.00' Lt			m
									124.9															UNLINED DITCH	"A3" LINE 899+79.00 37.00' Lt			
		n																		4.7	15.6			14' x 6' x 1.5' RSP	"A4" LINE 899+79.00 45.40' Rt			n
		o																		4.7	15.6			14' x 6' x 1.5' RSP	"A3" LINE 901+17.00 37.00' Lt			o
↓	↓								166.6															UNLINED DITCH	"A3" LINE 901+17.00 37.00' Lt	↓	↓	
D-3	8	p																		4.7	15.6			14' x 6' x 1.5' RSP	"A4" LINE 901+17.00 45.50' Rt	D-3	8	p
D-4	8	q																		4.7	15.6			14' x 6' x 1.5' RSP	"A3" LINE 904+09.00 37.00' Lt	D-4	8	q
D-4	8								95.9															UNLINED DITCH	"A3" LINE 904+09.00 37.00' Lt	D-4	8	
D-3									260.6															UNLINED DITCH	"A4" LINE 895+77.00 45.50' Rt	D-3		
D-3									324.6															UNLINED DITCH	"A4" LINE 898+65.00 36.75' Rt	D-3		
D-3									59.9															UNLINED DITCH	"A4" LINE 901+86.00 38.70' Rt	D-3		
D-4	9	a																		4.7	15.6			14' x 6' x 1.5' RSP	"A4 LINE" 905+67.00 34.0' Rt	D-4	9	a
↕	↕	b																		4.7	15.6			14' x 6' x 1.5' RSP	"A3 LINE" 905+67.00 45.5' Lt	↕	↕	b
		c																		4.7	15.6			14' x 6' x 1.5' RSP	"A4 LINE" 908+21.00 34.0' Rt			c
SHEET TOTAL							625.9		1170.1	1				12.8	708		3		3.6	61.1	202.8							

DRAINAGE QUANTITIES
DQ-3

REVISED BY	DATE REVISED

CALCULATED-DESIGNED BY	CHECKED BY
HUSAM ABURABI	MARTHA DADALA

CONSULTANT FUNCTIONAL SUPERVISOR: KEITH MEYER

STATE OF CALIFORNIA - DEPARTMENT OF TRANSPORTATION

Caltrans

LAST REVISION 00-00-00

PLOTTED => 23-JUL-2013 TIME => 08:31

BORDER LAST REVISED 7/2/2010

USERNAME => s123631
DGN FILE => 10000002291id003.dgn

RELATIVE BORDER SCALE IS IN INCHES 0 1 2 3

UNIT 1455

PROJECT NUMBER & PHASE 10000002291

Dist	COUNTY	ROUTE	POST MILES TOTAL PROJECT	SHEET No.	TOTAL SHEETS
10	SJ	4,5	Var	109	486

REGISTERED CIVIL ENGINEER 12/24/12 DATE

7-22-13
PLANS APPROVAL DATE

REGISTERED PROFESSIONAL ENGINEER MARTHA M DADALA No. 66275 Exp. 6/30/2014 CIVIL STATE OF CALIFORNIA

THE STATE OF CALIFORNIA OR ITS OFFICERS OR AGENTS SHALL NOT BE RESPONSIBLE FOR THE ACCURACY OR COMPLETENESS OF SCANNED COPIES OF THIS PLAN SHEET.

RAJAPPAN & MEYER
CONSULTING ENGINEERS INC.
1038 LEIGH AVE, SUITE 100
SAN JOSE, CA 95126

SJCOG
555 E. WEBER AVE.
STOCKTON, CA 95202-2804

DRAINAGE QUANTITIES

DRAINAGE PLAN SHEET No.	DRAINAGE SYSTEM No.	DRAINAGE UNIT	REMOVE CULVERT (LF)	REMOVE INLET (EA)	CAP INLET (EA)	ADJUST INLET (EA)	APC 18" (LF)	APC 24" (LF)	DITCH EXCAVATION (CY)	AFES 18" (EA)	AFES 24" (EA)	PIPE JOINT CLASSIFICATION (N)	PIPE ELBOW (N) (EA)	36" PRECAST Conc PIPE INLET (LF)	Misc IRON AND STEEL (LB)	(N) FRAME, GRATE & COVER TYPE 24-12 (EA)	(N) FRAME, GRATE & COVER TYPE 36R (EA)	MINOR CONCRETE (MINOR STRUCTURE) (CY)	MINOR CONCRETE (Misc CONSTRUCTION) (CY)	RSP (No. 2, METHOD B) (CY)	RSP FABRIC (CLASS 8) (SQYD)	DESIGN H (N) (LF)	MAXIMUM COVER (N) (LF)	DESCRIPTION	STATION	DRAINAGE PLAN SHEET No.	DRAINAGE SYSTEM No.	DRAINAGE UNIT
D-4	9	d																		4.7	15.6			14' x 6' x 1.5' RSP	"A3 LINE" 908+60.00 45.5' Lt	D-4	9	d
									45.4															UNLINED DITCH	"A3 LINE" 905+67.00 45.5' Lt			
									47.4															UNLINED DITCH	"A3 LINE" 908+60.00 45.5' Lt			
		e												3.1	236		1		1.20			2.6		TYPE GCP DI w/ APRON	"A1 LINE" 907+00.00 65.71' Lt			e
		f					146.7					SJT											1.0	18" APC	"A1 LINE" 907+00.00 65.71' Lt			f
		g								1														18" AFES	"A1 LINE" 906+99.84 82.39' Rt			g
D-4	9	h																		2.8	10.4			11' x 4.5' x 1.5' RSP	"A1 LINE" 906+99.84 82.39' Rt	D-4	9	h
D-4	10	a		1																				REMOVE INLET H=5.5'	"A4 LINE" 910+36.28 55.38' Rt	D-4	10	a
		b	22.8																				4.0	REMOVE 18" RCP	"A4 LINE" 910+36.28 55.38' Rt			b
D-4	10	c				1																		ADJUST INLET	"A4 LINE" 910+80.00 134.5' Rt	D-4	10	c
D-4	11	a													326	1		1.19	1.14			4.1		TYPE G1 DI w/ 1.25" SGD	"A3" LINE 911+55.00 34.00' Lt	D-4	11	a
		b					81.1					SJT											2.5	18" APC	"A3" LINE 911+55.00 34.00' Lt			b
		c													326	1		1.39	1.14			5.0		TYPE G1 DI w/ 1.25" SGD	"A3" LINE 912+40.00 34.00' Lt			c
		d					156.1					SJT											3.6	18" APC	"A3" LINE 912+40.00 34.00' Lt			d
		e													326	1		1.08	1.14			3.6		TYPE G1 DI w/ 1.25" SGD	"A3" LINE 914+00.00 34.00' Lt			e
		f					70.2					SJT											2.1	18" APC	"A3" LINE 914+00.00 34.00' Lt			f
		g												3.4	236		1		1.20			2.9		TYPE GCP DI w/ APRON	"A1" LINE 911+60.28 0.00' Lt			g
		h					76.5					SJT											1.5	18" APC	"A1" LINE 911+60.28 0.00' Lt			h
		i												3.9	236		1		1.20			3.4		TYPE GCP DI w/ APRON	"A1" LINE 912+40.00 0.00' Lt			i
D-4	11	j					156.5					SJT											2.0	18" APC	"A1" LINE 912+40.00 0.00' Lt	D-4	11	j
SHEET TOTAL			22.8	1		1	687.1		92.8	1				10.4	1686	3	3	3.66	7.02	7.5	26.0							

REVISED BY | DATE REVISED
HUSAM ABURABI | MARTHA DADALA
CALCULATED-DESIGNED BY | CHECKED BY
CONSULTANT FUNCTIONAL SUPERVISOR: KEITH MEYER
STATE OF CALIFORNIA - DEPARTMENT OF TRANSPORTATION
Caltrans

LAST REVISION 00-00-00 | DATE PLOTTED => 23-JUL-2013 | TIME PLOTTED => 08:31

DRAINAGE QUANTITIES
DQ-4

Dist	COUNTY	ROUTE	POST MILES TOTAL PROJECT	SHEET No.	TOTAL SHEETS
10	SJ	4,5	Var	110	486

REGISTERED CIVIL ENGINEER 12/24/12 DATE

7-22-13
PLANS APPROVAL DATE

REGISTERED PROFESSIONAL ENGINEER MARTHA M DADALA No. 66275 Exp. 6/30/2014 CIVIL STATE OF CALIFORNIA

THE STATE OF CALIFORNIA OR ITS OFFICERS OR AGENTS SHALL NOT BE RESPONSIBLE FOR THE ACCURACY OR COMPLETENESS OF SCANNED COPIES OF THIS PLAN SHEET.

RAJAPPAN & MEYER
CONSULTING ENGINEERS INC.
1038 LEIGH AVE, SUITE 100
SAN JOSE, CA 95126

SJCOG
555 E. WEBER AVE.
STOCKTON, CA 95202-2804

DRAINAGE QUANTITIES

DRAINAGE PLAN SHEET No.	DRAINAGE SYSTEM No.	DRAINAGE UNIT	REMOVE CULVERT (LF)	REMOVE INLET (EA)	CAP INLET (EA)	ADJUST INLET (EA)	APC 18" (LF)	APC 24" (LF)	DITCH EXCAVATION (CY)	AFES 18" (EA)	AFES 24" (EA)	PIPE JOINT CLASSIFICATION (N)	PIPE ELBOW (N) (EA)	36" PRECAST Conc PIPE INLET (LF)	Misc IRON AND STEEL (LB)	(N) FRAME, GRATE & COVER TYPE 24-12 (EA)	(N) FRAME, GRATE & COVER TYPE 36R (EA)	MINOR CONCRETE (MINOR STRUCTURE) (CY)	MINOR CONCRETE (Misc CONSTRUCTION) (CY)	RSP (No. 2, METHOD B) (CY)	RSP FABRIC (CLASS 8) (SQYD)	DESIGN H (N) (LF)	MAXIMUM COVER (N) (LF)	DESCRIPTION	STATION	DRAINAGE PLAN SHEET No.	DRAINAGE SYSTEM No.	DRAINAGE UNIT
D-4	11	k												4.2	236		1					3.7		TYPE GCP DI w/ APRON	"A1" LINE 914+00.00 0.00' L+	D-4	11	k
		l					80.0					SJT											2.0	18" APC	"A1" LINE 914+00.00 0.00' L+			l
		m													326	1		1.15	1.14			3.9		TYPE G1 DI w/ 1.25" SGD	"A4" LINE 911+07.00 34.00' R+			m
		n					132.7					SJT											2.3	18" APC	"A4" LINE 911+07.00 34.00' R+			n
		o													326	1		1.15	1.14			3.9		TYPE G1 DI w/ 1.25" SGD	"A4" LINE 912+42.85 37.61' R+			o
		p					153.7					SJT											2.3	18" APC	"A4" LINE 912+42.85 37.61' R+			p
		q													326	1		1.57	1.14			5.8		TYPE G1 DI w/ 1.25" SGD	"A4" LINE 914+00.00 46.00' R+			q
		r					71.9					SJT	2										4.2	18" APC	"A4" LINE 914+00.00 46.00' R+			r
		s								1														18" AFES	"A4" LINE 914+00.00 111.98' R+			s
		t																		2.8	10.4			11' x 4.5' x 1.5' RSP	"A4" LINE 914+00.00 111.98' R+			t
	11	u				1																		ADJUST INLET	"A3" LINE 911+28.77 92.61' L+		11	u
									37.0															BIOFILTRATION SWALE	"A4" LINE 910+80.00 134.5' R+			
									59.9															BIOFILTRATION SWALE	"A4" LINE 912+04.00 125.6' R+			
D-4									61.0															BIOFILTRATION SWALE	"A4" LINE 914+04.00 120.5' R+	D-4		
																								REMOVE INLET H=4.8'	"A4" LINE 910+36.28 55.38' R+	D-4	12	a
D-4	12	a		1																								
		b	46.0																				3.3	REMOVE CULVERT	"A4" LINE 910+36.28 55.38' R+			b
D-4	13	a													326	1		1.13	1.14			3.8		TYPE G1 DI w/ 1.25" SGD	"A3" LINE 916+18.25 34.00' L+	D-4	13	a
		b					74.6					SJT											2.2	18" APC	"A3" LINE 916+18.25 34.00' L+			b
		c												3.9	236		1		1.20			3.4		TYPE GCP DI w/ APRON	"A1" LINE 916+14.90 0.00' L+			c
		d						80.3				SJT											1.6	24" APC	"A1" LINE 916+14.90 0.00' L+			d
		e													326	1		1.28	1.14			4.5		TYPE G1 DI w/ 1.25" SGD	"A4" LINE 916+12.98 46.00' R+			e
		f						68.4				SJT	2										2.6	24" APC	"A4" LINE 916+12.98 46.00' R+			f
		g									1													24" AFES	"A4" LINE 916+11.31 112.29' R+			g
		h																		4.7	15.6			14' x 6' x 1.5' RSP	"A4" LINE 916+11.31 112.29' R+			h
SHEET TOTAL			46.0	1		1	512.9	148.7	157.9	1	1		4	8.1	2102	5	2	6.28	6.9	7.5	26.0							

STATE OF CALIFORNIA - DEPARTMENT OF TRANSPORTATION
Caltrans

CONSULTANT FUNCTIONAL SUPERVISOR: KEITH MEYER

CALCULATED-DESIGNED BY: HUSAM ABURABI
CHECKED BY: MARTHA DADALA

REVISED BY
DATE REVISED

LAST REVISION 00-00-00 DA TIME
PLOTTED => 23-JUL-2013
PLOTTED => 08:31

DRAINAGE QUANTITIES
DQ-5

BORDER LAST REVISED 7/2/2010

USERNAME => s123631
DGN FILE => 10000002291d005.dgn

RELATIVE BORDER SCALE IS IN INCHES 0 1 2 3

UNIT 1455

PROJECT NUMBER & PHASE 10000002291

Dist	COUNTY	ROUTE	POST MILES TOTAL PROJECT	SHEET No.	TOTAL SHEETS
10	SJ	4,5	Var	111	486

REGISTERED CIVIL ENGINEER 12/24/12 DATE

7-22-13
PLANS APPROVAL DATE

REGISTERED PROFESSIONAL ENGINEER MARTHA M DADALA No. 66275 Exp. 6/30/2014 CIVIL STATE OF CALIFORNIA

THE STATE OF CALIFORNIA OR ITS OFFICERS OR AGENTS SHALL NOT BE RESPONSIBLE FOR THE ACCURACY OR COMPLETENESS OF SCANNED COPIES OF THIS PLAN SHEET.

RAJAPPAN & MEYER
CONSULTING ENGINEERS INC.
1038 LEIGH AVE, SUITE 100
SAN JOSE, CA 95126

SJCOG
555 E. WEBER AVE.
STOCKTON, CA 95202-2804

DRAINAGE QUANTITIES

DRAINAGE PLAN SHEET No.	DRAINAGE SYSTEM No.	DRAINAGE UNIT	REMOVE CULVERT (LF)	REMOVE INLET (EA)	CAP INLET (EA)	ADJUST INLET (EA)	APC 18" (LF)	APC 24" (LF)	DITCH EXCAVATION (CY)	AFES 18" (EA)	AFES 24" (EA)	PIPE JOINT CLASSIFICATION (N)	PIPE ELBOW (N) (EA)	36" PRECAST Conc PIPE INLET (LF)	Misc IRON AND STEEL (LB)	(N) FRAME, GRATE & COVER TYPE 24-12 (EA)	(N) FRAME, GRATE & COVER TYPE 36R (EA)	MINOR CONCRETE (MINOR STRUCTURE) (CY)	MINOR CONCRETE (Misc CONSTRUCTION) (CY)	RSP (No. 2, METHOD B) (CY)	RSP FABRIC (CLASS 8) (SQYD)	DESIGN H (N) (LF)	MAXIMUM COVER (N) (LF)	DESCRIPTION	STATION	DRAINAGE PLAN SHEET No.	DRAINAGE SYSTEM No.	DRAINAGE UNIT
D-4	14	a		1																				REMOVE INLET H=4.8′	"A3" LINE 917+36.80 79.72′ Lt	D-4	14	a
		b	50.0																				3.3	REMOVE CULVERT	"A3" LINE 917+36.80 79.72′ Lt			b
		c		1																		4.0		REMOVE INLET	"A3" LINE 917+00.00 44.58′ Lt			c
		d	9.0																				2.5	REMOVE CULVERT	"A3" LINE 917+00.00 44.58′ Lt			d
		e													326	1		1.46	1.14			5.3		TYPE G1 DI w/ 1.25" SGD	"A3" LINE 917+00.00 34.00′ Lt			e
		f				1																		ADJUST INLET	"A1" LINE 917+00.00 00.00′ Lt			f
		g			1																			CAP INLET	"A4" LINE 917+00.00 25.90′ Rt			g
		h													326	1		1.26	1.14			4.4		TYPE G1 DI w/ 1.25" SGD	"A4" LINE 917+00.00 46.00′ Rt			h
		i	20.0																				3.1	REMOVE CULVERT	"A4" LINE 917+50.00 46.00′ Rt			i
D-4	14	j		1																				REMOVE INLET H=4.6′	"A4" LINE 917+00.00 62.11′ Rt	D-4	14	j
D-5	15	a		1																				REMOVE INLET H=4.7′	"A3" LINE 921+50.00 40.16′ Lt	D-5	15	a
		b													326	1		1.37	1.14			4.9		TYPE G1 DI w/ 1.25" SGD	"A3" LINE 921+53.15 34.00′ Lt			b
		c				1																		ADJUST INLET	"A3" LINE 921+53.15 00.00′ Lt			c
		d													326	1		1.28	1.14			4.5		TYPE G1 DI w/ 1.25" SGD	"A4" LINE 921+55.49 46.00′ Rt			d
		e		1																				REMOVE INLET H=4.8′	"A4" LINE 921+55.49 47.30′ Rt			e
D-5	15	f	8.0																				4.7	REMOVE CULVERT	"A3" LINE 921+50.00 40.16′ Lt	D-5	15	f
SHEET TOTAL			87.0	5	1	2									1304	4		5.37	4.56									

DRAINAGE QUANTITIES
DQ-6

REVISED BY | DATE REVISED
HUSAM ABURABI | MARTHA DADALA
CALCULATED-DESIGNED BY | CHECKED BY
CONSULTANT FUNCTIONAL SUPERVISOR: KEITH MEYER

STATE OF CALIFORNIA - DEPARTMENT OF TRANSPORTATION
Caltrans

LAST REVISION 00-00-00 | DATE PLOTTED => 23-JUL-2013 | TIME PLOTTED => 08:31

Dist	COUNTY	ROUTE	POST MILES TOTAL PROJECT	SHEET No.	TOTAL SHEETS
10	SJ	4,5	Var	121	486

REGISTERED CIVIL ENGINEER 12/24/12 DATE

7-22-13
PLANS APPROVAL DATE

REGISTERED PROFESSIONAL ENGINEER MICHAEL CONRAD No. 32921 Exp. 06/30/2014 CIVIL STATE OF CALIFORNIA

THE STATE OF CALIFORNIA OR ITS OFFICERS OR AGENTS SHALL NOT BE RESPONSIBLE FOR THE ACCURACY OR COMPLETENESS OF SCANNED COPIES OF THIS PLAN SHEET.

KJELDSEN, SINNOCK & NEUDECK, INC.
CIVIL ENGINEERS & LAND SURVEYORS
711 N. PERSHING AVENUE
STOCKTON, CA 95203

SJCOG
555 E. WEBER AVE.
STOCKTON, CA 95202-2804

NOTE:
FOR ACCURATE RIGHT OF WAY DATA, CONTACT RIGHT OF WAY ENGINEERING AT THE DISTRICT OFFICE.

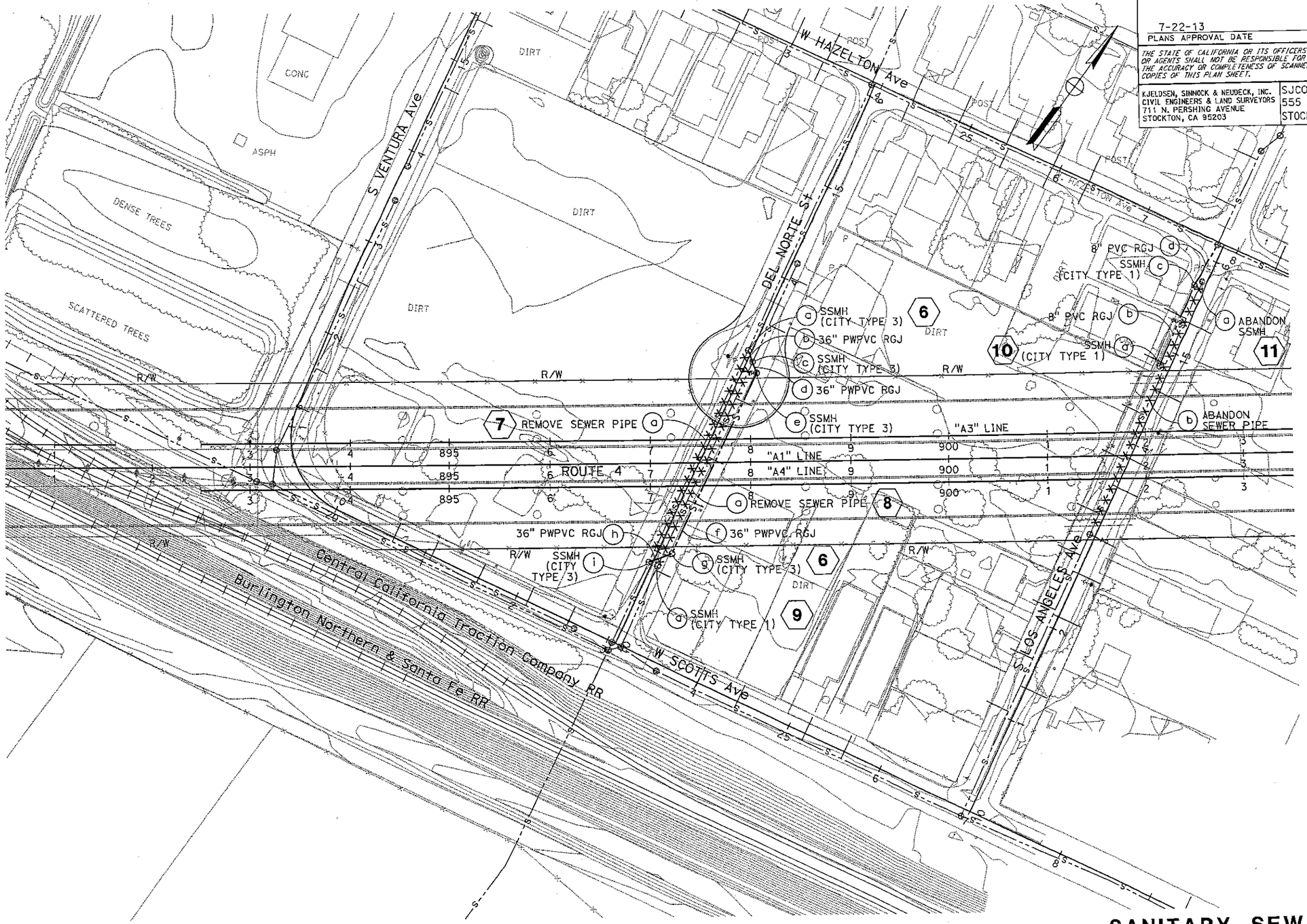

SANITARY SEWER PLAN

SCALE: 1" = 50'

SS-2

APPROVED FOR SANITARY SEWER WORK ONLY

STATE OF CALIFORNIA - DEPARTMENT OF TRANSPORTATION
Caltrans

CONSULTANT FUNCTIONAL SUPERVISOR: STEPHEN SINNOCK
CALCULATED-DESIGNED BY: ELIZABETH REGAN
CHECKED BY: MICHAEL CONRAD
REVISED BY
DATE REVISED

LAST REVISION 00-00-00
DATE PLOTTED => 23-JUL-2013
TIME PLOTTED => 08:33

BORDER LAST REVISED 7/2/2010
USERNAME => s123631
DGN FILE => 1000000229ja002.dgn
RELATIVE BORDER SCALE IS IN INCHES 0 1 2 3
UNIT 1455
PROJECT NUMBER & PHASE 10000002291

Dist	COUNTY	ROUTE	POST MILES TOTAL PROJECT	SHEET No.	TOTAL SHEETS
10	SJ	4,5	Var	126	486

REGISTERED CIVIL ENGINEER 12/24/12 DATE

7-22-13
PLANS APPROVAL DATE

REGISTERED PROFESSIONAL ENGINEER MICHAEL CONRAD No. 32921 Exp. 06/30/2014 CIVIL STATE OF CALIFORNIA

THE STATE OF CALIFORNIA OR ITS OFFICERS OR AGENTS SHALL NOT BE RESPONSIBLE FOR THE ACCURACY OR COMPLETENESS OF SCANNED COPIES OF THIS PLAN SHEET.

KJELDSEN, SINNOCK & NEUDECK, INC.
CIVIL ENGINEERS & LAND SURVEYORS
711 N. PERSHING AVENUE
STOCKTON, CA 95203

SJCOG
555 E. WEBER AVE.
STOCKTON, CA 95202-2804

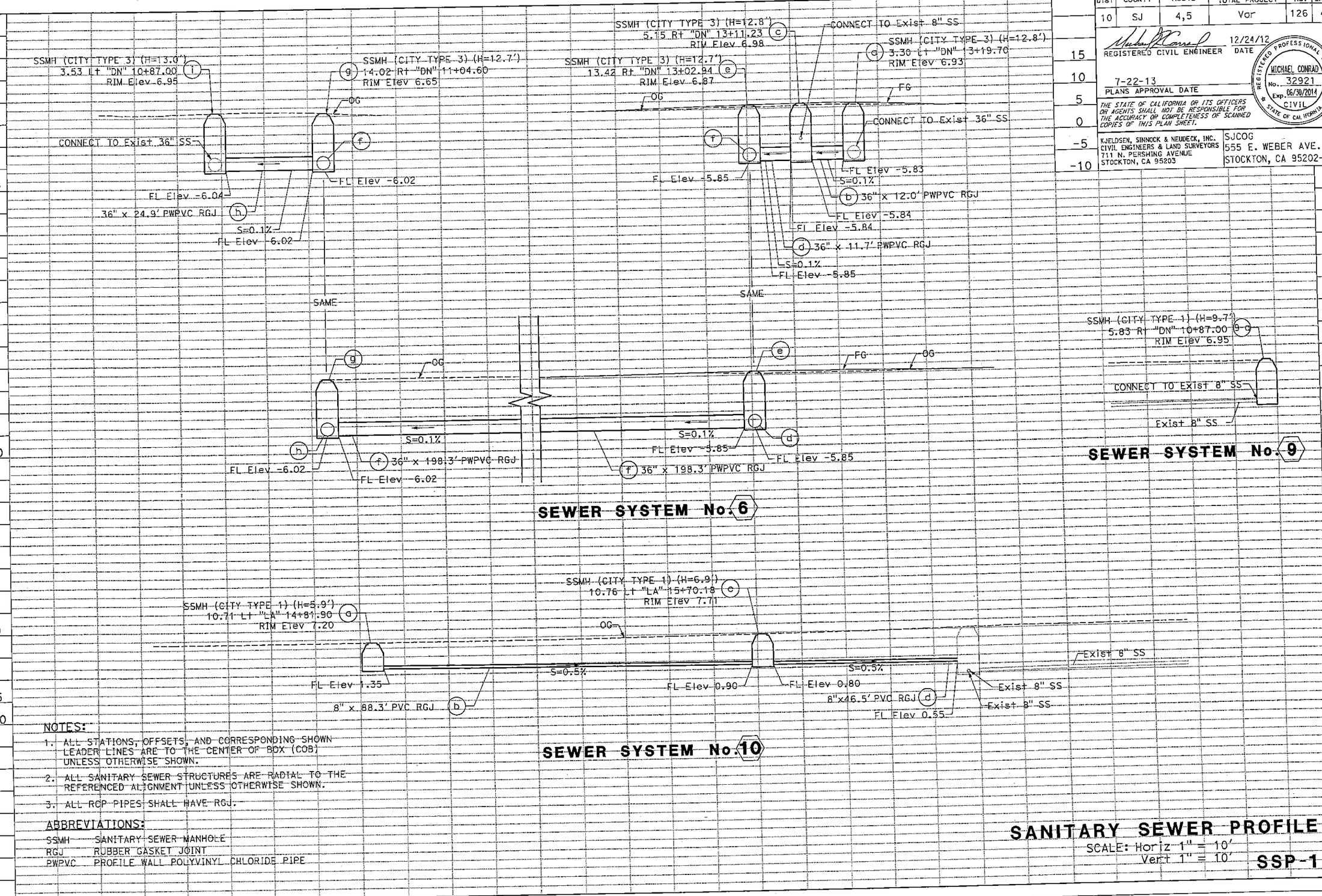

NOTES:

1. ALL STATIONS, OFFSETS, AND CORRESPONDING SHOWN LEADER LINES ARE TO THE CENTER OF BOX (COB) UNLESS OTHERWISE SHOWN.
2. ALL SANITARY SEWER STRUCTURES ARE RADIAL TO THE REFERENCED ALIGNMENT UNLESS OTHERWISE SHOWN.
3. ALL RCP PIPES SHALL HAVE RGJ.

ABBREVIATIONS:

SSMH SANITARY SEWER MANHOLE
RGJ RUBBER GASKET JOINT
PWPVC PROFILE WALL POLYVINYL CHLORIDE PIPE

SANITARY SEWER PROFILE

SCALE: Horiz 1" = 10'
Vert 1" = 10'

SSP-1

REVISED BY | DATE REVISED
ELIZABETH REGAN | MICHAEL CONRAD
CALCULATED-DESIGNED BY | CHECKED BY
CONSULTANT FUNCTIONAL SUPERVISOR
STEPHEN SINNOCK

STATE OF CALIFORNIA - DEPARTMENT OF TRANSPORTATION
Caltrans

STATION	
CY	Exc
	Emb

TOTAL

LAST REVISION 00-00-00 DA TIM

ITED => 23-JUL-2013
ITED => 08:33

BORDER LAST REVISED 7/2/2010

USERNAME => s123631
DGN FILE => 1000000229jb001.dgn

RELATIVE BORDER SCALE IS IN INCHES 0 1 2 3

UNIT 1455

PROJECT NUMBER & PHASE 10000002291

Dist	COUNTY	ROUTE	POST MILES TOTAL PROJECT	SHEET No.	TOTAL SHEETS
10	SJ	4,5	Var	127	486

REGISTERED CIVIL ENGINEER 12/24/12 DATE

7-22-13
PLANS APPROVAL DATE

REGISTERED PROFESSIONAL ENGINEER MICHAEL CONRAD No. 32921 Exp. 06/30/2014 CIVIL STATE OF CALIFORNIA

THE STATE OF CALIFORNIA OR ITS OFFICERS OR AGENTS SHALL NOT BE RESPONSIBLE FOR THE ACCURACY OR COMPLETENESS OF SCANNED COPIES OF THIS PLAN SHEET.

KJELDSEN, SINNOCK & NEUDECK, INC.
CIVIL ENGINEERS & LAND SURVEYORS
711 N. PERSHING AVENUE
STOCKTON, CA 95203

SJCOG
555 E. WEBER AVE.
STOCKTON, CA 95202-2804

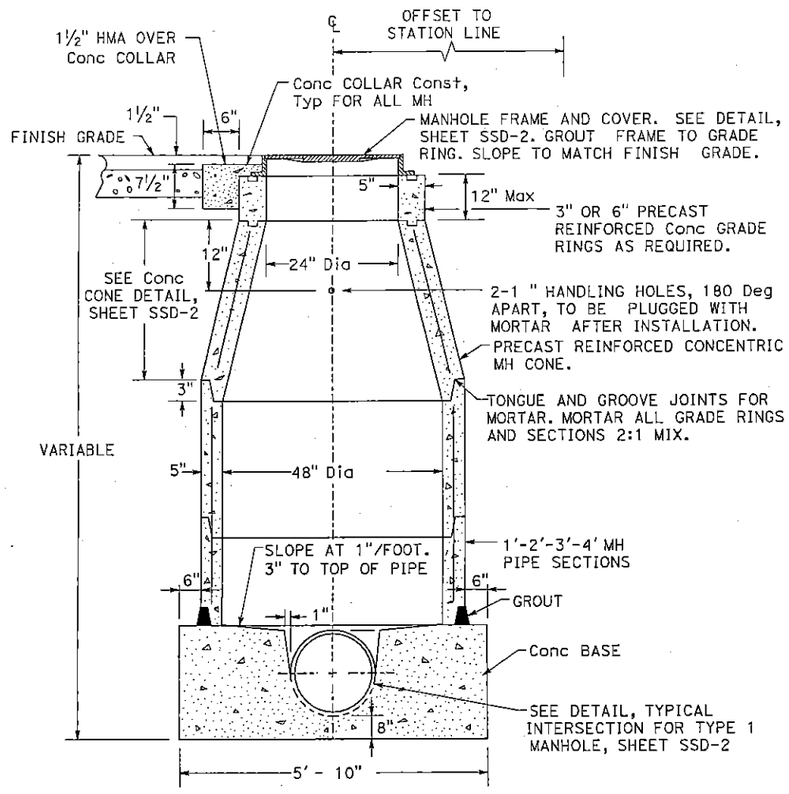

NOTES:

1. PRECAST Conc MH UNITS SHALL CONFORM TO ASTM DESIGNATION C-478.
2. CONSTRUCT PIPE STUB JOINT, 2 FEET Min FROM BASE OF MH ATTACH PIPE WITH FLEXIBLE RUBBER COUPLING.
3. PRIOR APPROVAL MUST BE OBTAINED BEFORE INSTALLING MORE THAN 12" OF GRADE RINGS.

SSMH (CITY TYPE 1)

9 ⓐ 10 ⓐⓒ

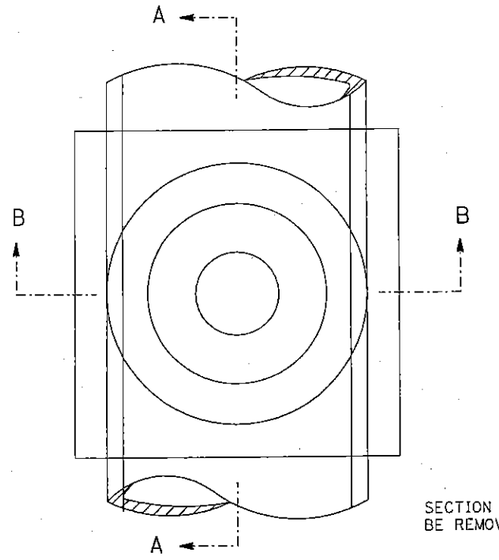

PLAN

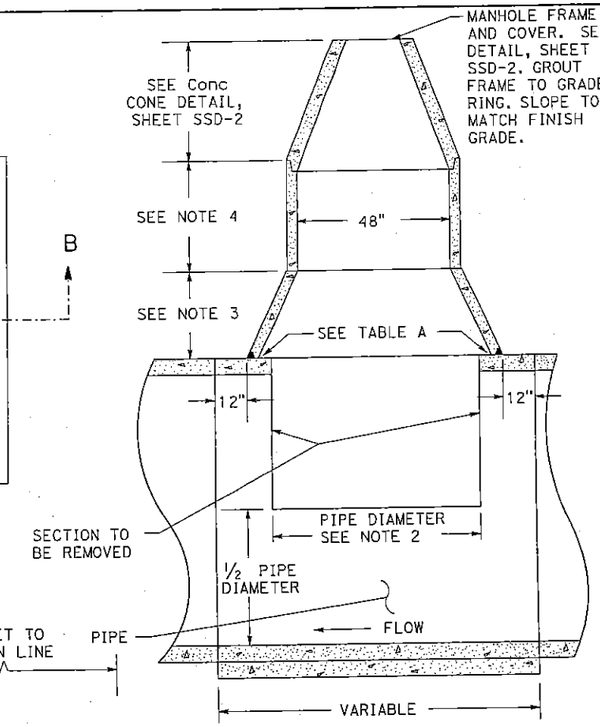

SECTION A-A

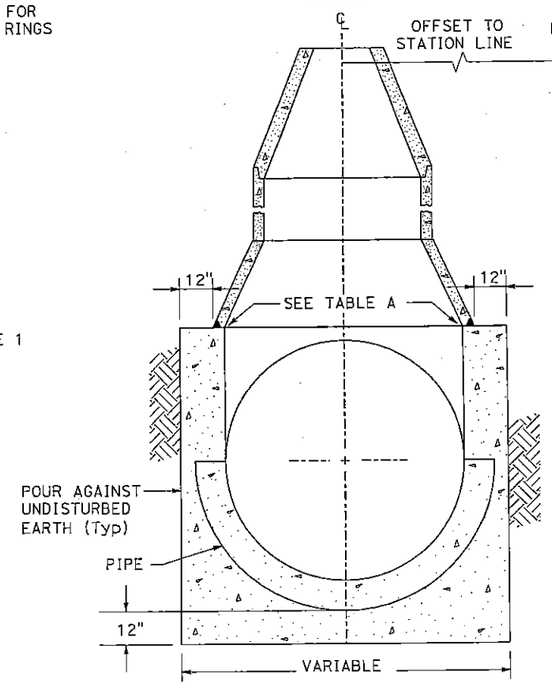

SECTION B-B

NOTES:

1. ALL CONE SECTIONS TO CONFORM TO ASTM DESIGNATION C-478.
2. MH TO BE PLACED SUCH THAT EXISTING, OR CAST IN PLACE PIPE, RUNS STRAIGHT THROUGH. BREAK OUT TOP OF PIPE, TO A LENGTH EQUAL TO THE PIPE DIAMETER, TO PIPE SPRING LINE.
3. INSTALL CONCENTRIC PRECAST Conc CONE.
4. IF REQUIRED, INSTALL STANDARD 48" PRECAST Conc VERTICAL SECTIONS TO MEET GRADE.

SSMH (CITY TYPE 3)

6 ⓐⓒⓔⓖⓘ

SANITARY SEWER DETAILS

NO SCALE

SSD-1

REVISED BY	DATE REVISED

CALCULATED-DESIGNED BY: ELIZABETH REGAN
CHECKED BY: MICHAEL CONRAD
CONSULTANT FUNCTIONAL SUPERVISOR: STEPHEN SINNOCK

STATE OF CALIFORNIA - DEPARTMENT OF TRANSPORTATION

LAST REVISION 00-00-00 | DATE PLOTTED => 23-JUL-2013 | TIME PLOTTED => 08:33

Dist	COUNTY	ROUTE	POST MILES TOTAL PROJECT	SHEET No.	TOTAL SHEETS
10	SJ	4,5	Var	128	486

REGISTERED CIVIL ENGINEER 12/24/12 DATE

7-22-13
PLANS APPROVAL DATE

REGISTERED PROFESSIONAL ENGINEER MICHAEL CONRAD No. 32921 Exp. 06/30/2014 CIVIL STATE OF CALIFORNIA

THE STATE OF CALIFORNIA OR ITS OFFICERS OR AGENTS SHALL NOT BE RESPONSIBLE FOR THE ACCURACY OR COMPLETENESS OF SCANNED COPIES OF THIS PLAN SHEET.

KJELDSEN, SINNOCK & NEUDECK, INC.
CIVIL ENGINEERS & LAND SURVEYORS
711 N. PERSHING AVENUE
STOCKTON, CA 95203

SJCOG
555 E. WEBER AVE.
STOCKTON, CA 95202-2804

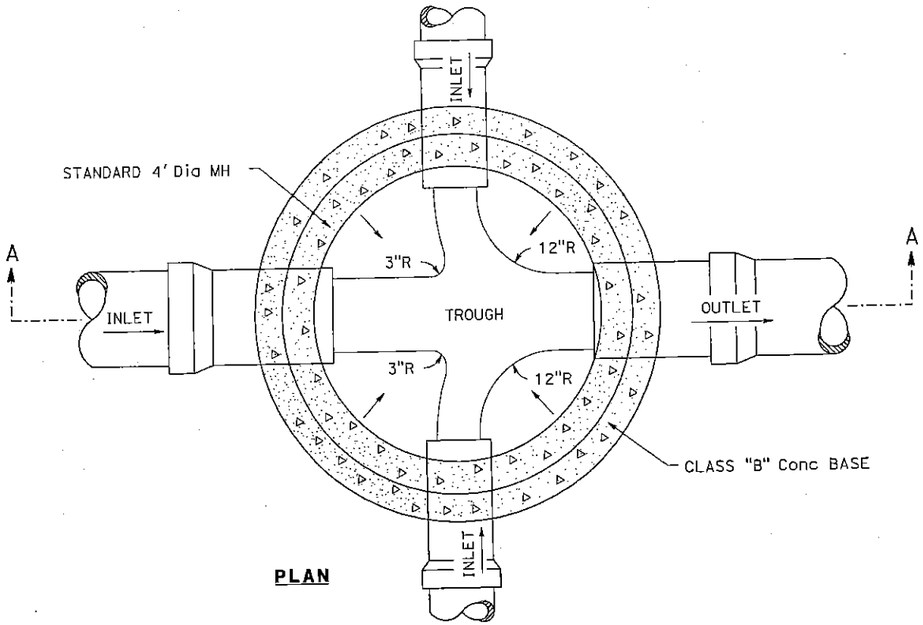

PLAN

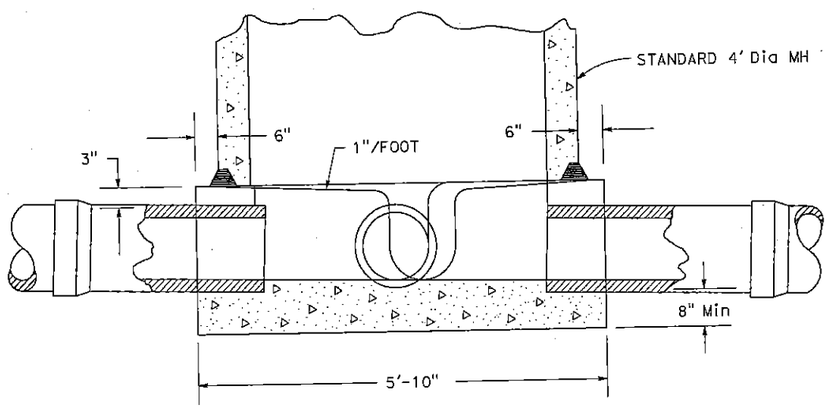

SECTION A-A

NOTES:

1. TROUGHS WITHIN MH TO BE FULLY ACCESSIBLE.
2. INLET PIPES NOT TO EXTEND MORE THAN 3" INTO MH.
3. OUTLET PIPE TO BE FLUSH AND ALL EDGES SMOOTH WITH MH WALL.
4. CONSTRUCT PIPE JOINTS AT 2' Max FROM BASE OF MH (FLEXIBLE JOINTS).
5. MH BOTTOM SHALL BE HYDRAULICALLY SHAPED IN THE FIELD AS DIRECTED.

TYPICAL INTERSECTION FOR TYPE 1 MANHOLE

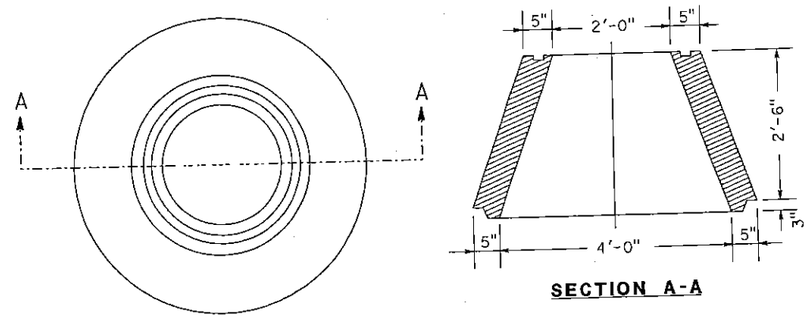

SECTION A-A

NOTE:

ALL HANDLING HOLES SHALL BE PLUGGED WITH Conc MORTAR AFTER CONE INSTALLATION.

CITY OF STOCKTON STANDARD PRE-CAST Conc MANHOLE CONCENTRIC CONE

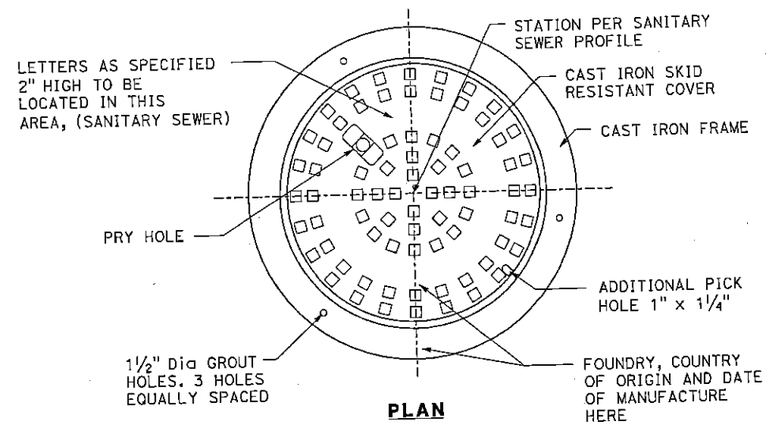

PLAN

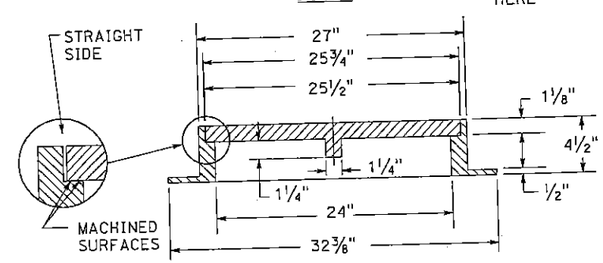

SECTION

NOTE:

FRAME AND COVER MUST BE FULLY MACHINED TO ASSURE INTERCHANGEABILITY AND A CLOSE QUIET FIT.

MANHOLE FRAME AND COVER

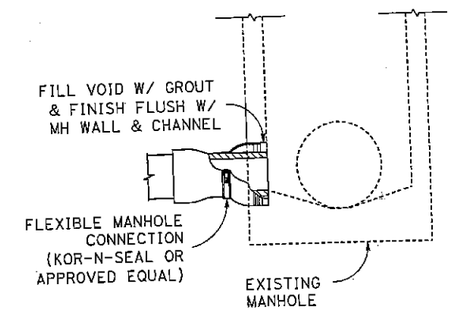

PIPE CONNECTION TO EXISTING SANITARY SEWER STRUCTURE

10 (e)

SANITARY SEWER DETAILS

NO SCALE

SSD-2

REVISED BY	DATE REVISED

CALCULATED-DESIGNED BY	ELIZABETH REGAN
CHECKED BY	MICHAEL CONRAD
CONSULTANT FUNCTIONAL SUPERVISOR	STEPHEN SINNOCK

STATE OF CALIFORNIA - DEPARTMENT OF TRANSPORTATION
Caltrans

LAST REVISION 00-00-00 DATE PLOTTED => 23-JUL-2013 TIME PLOTTED => 08:33

Dist	COUNTY	ROUTE	POST MILES TOTAL PROJECT	SHEET No.	TOTAL SHEETS
10	SJ	4,5	Var	129	486

REGISTERED CIVIL ENGINEER 12/24/12 DATE

7-22-13
PLANS APPROVAL DATE

REGISTERED PROFESSIONAL ENGINEER MICHAEL CONRAD No. 32921 Exp. 06/30/2014 CIVIL STATE OF CALIFORNIA

THE STATE OF CALIFORNIA OR ITS OFFICERS OR AGENTS SHALL NOT BE RESPONSIBLE FOR THE ACCURACY OR COMPLETENESS OF SCANNED COPIES OF THIS PLAN SHEET.

KJELDSEN, SINNOCK & NEUDECK, INC.
CIVIL ENGINEERS & LAND SURVEYORS
711 N. PERSHING AVENUE
STOCKTON, CA 95203

SJCOG
555 E. WEBER AVE.
STOCKTON, CA 95202-2804

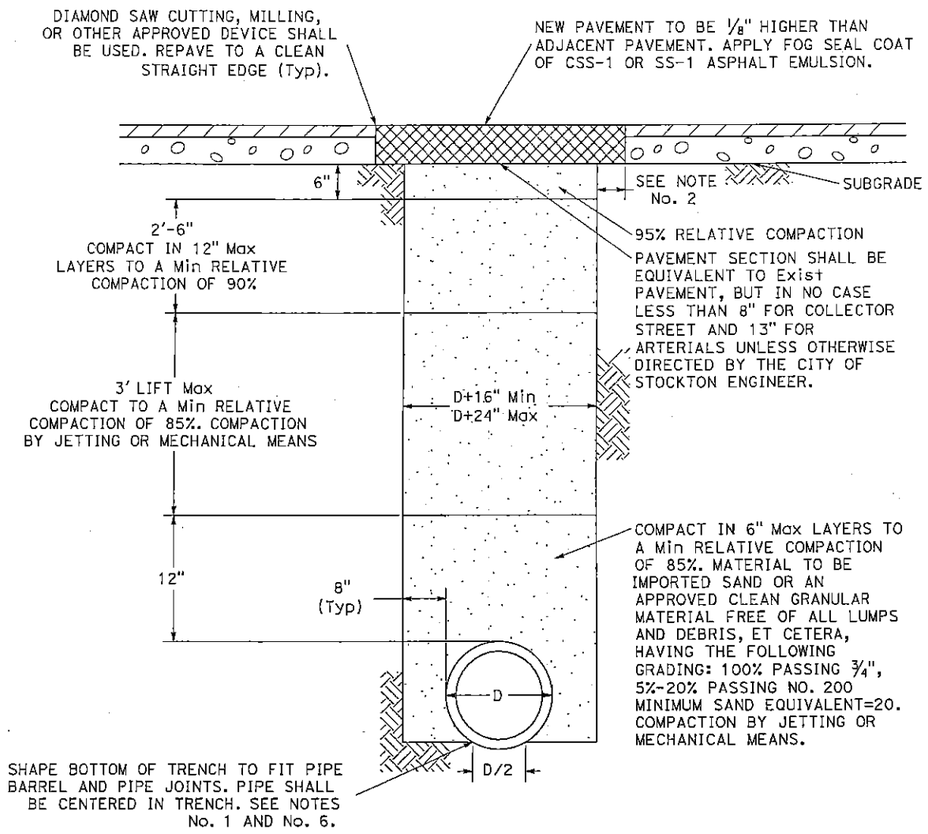

NOTES:

1. FOR RIGID PIPE, CONTRACTOR MAY, AT THEIR EXPENSE EXCAVATE 6" BELOW THE BOTTOM OF THE PIPE AND REPLACE WITH SAND OR AGGREGATE SUBBASE IN LIEU OF SHAPING BOTTOM OF TRENCH TO FIT PIPE BARREL. JOINTS SHALL BE SHAPED IN EITHER CASE. COMPACT TO 85%.
2. WHEN TRENCH AND EXCAVATION IS IN EXISTING PAVED STREETS, REPLACE PAVEMENT 12" ON EACH SIDE OF TRENCH, 6" FOR BORE PITS, BELL HOLES AND POT HOLES LESS THAN 50 SQUARE FEET.
3. DEVIATION FROM ABOVE MAY BE ALLOWED WHEN APPROVED BY THE ENGINEER.
4. TRENCH - WHERE THE TRENCH SECTION PARALLELS THE Exist CURB AND GUTTER, THE EDGE OF THE TRENCH SHALL BE A Min OF 1'-0" FROM THE LIP OF THE Exist GUTTER. THE PAVEMENT SHALL BE REMOVED AND REPLACED TO THE LIP OF THE GUTTER.
5. CONTROLLED DENSITY FILL (CDF) MAY BE USED IN LIEU OF SPECIFIED BACKFILL METHOD. MINIMUM TRENCH WIDTH MAY BE REDUCED TO 2½" CLEAR OF EACH SIDE OF PIPE.
6. FLEXIBLE PIPE SHALL HAVE A 6" BEDDING OF GRANULAR MATERIAL AS DESCRIBED IN NOTE 1. "D" INDICATES OUTSIDE DIAMETER.
7. ALL VERTICAL EDGES OF EXISTING ASPHALT CONCRETE SHALL BE TACK COATED.

EXISTING STREET TRENCH SECTION FOR TRENCHES WIDER THAN 8" WITHIN CITY OF STOCKTON RIGHT OF WAY

6 (b)(d)(f)(h)
10 (b)(d)

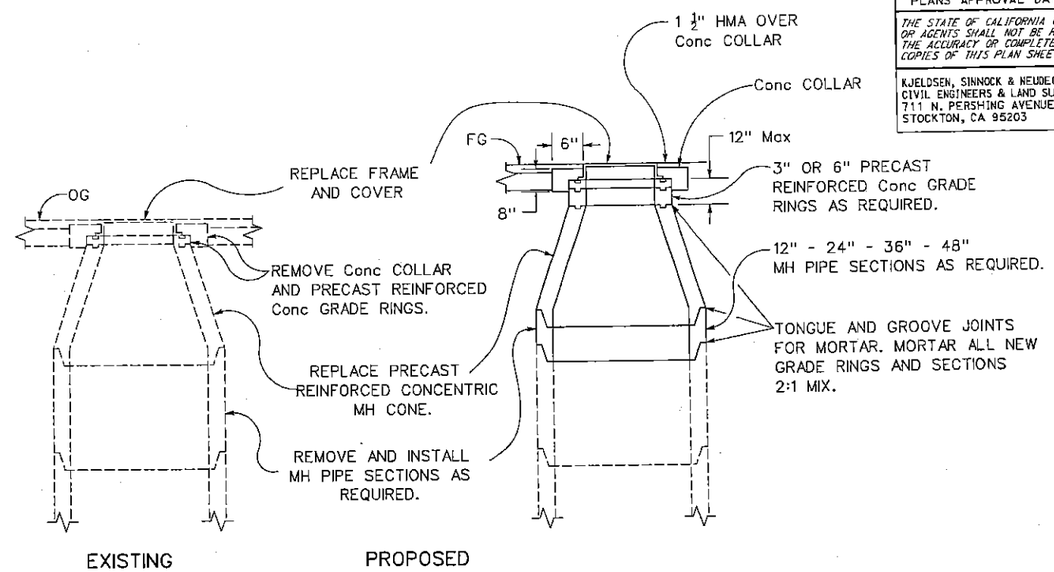

ADJUST SSMH TO GRADE

1 (a) 2 (a) 3 (a) 4 (a) 5 (a) 12 (a) 13 (a) 14 (a) 15 (a) 16 (a) 17 (a) 18 (a) 19 (a) 20 (a) 21 (a) 22 (a) 23 (a) 24 (a) 25 (a) 26 (a) 27 (a) 28 (a) 29 (a) 30 (a) 31 (a) 32 (a) 33 (a)

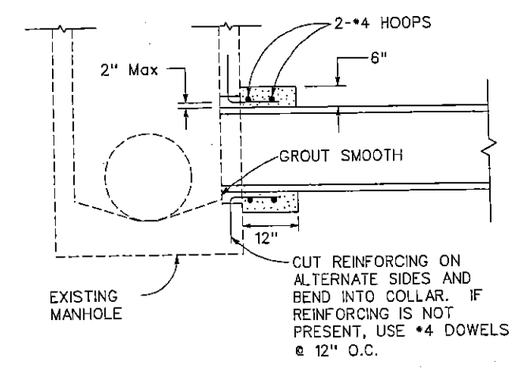

PIPE CONNECTION TO EXISTING SANITARY SEWER STRUCTURE

10 (d)

SANITARY SEWER DETAILS

NO SCALE

SSD-3

REVISED BY	DATE REVISED

CALCULATED-DESIGNED BY: ELIZABETH REGAN
CHECKED BY: MICHAEL CONRAD
CONSULTANT FUNCTIONAL SUPERVISOR: STEPHEN SINNOCK

STATE OF CALIFORNIA - DEPARTMENT OF TRANSPORTATION
Caltrans

LAST REVISION 00-00-00
DATE PLOTTED => 23-JUL-2013
TIME PLOTTED => 08:33

Dist	COUNTY	ROUTE	POST MILES TOTAL PROJECT	SHEET No.	TOTAL SHEETS
10	SJ	4,5	Var	130	486

REGISTERED CIVIL ENGINEER 12/24/12 DATE

7-22-13
PLANS APPROVAL DATE

REGISTERED PROFESSIONAL ENGINEER MICHAEL CONRAD No. 32921 Exp. 06/30/2014 CIVIL STATE OF CALIFORNIA

THE STATE OF CALIFORNIA OR ITS OFFICERS OR AGENTS SHALL NOT BE RESPONSIBLE FOR THE ACCURACY OR COMPLETENESS OF SCANNED COPIES OF THIS PLAN SHEET.

KJELDSEN, SINNOCK & NEUDECK, INC.
CIVIL ENGINEERS & LAND SURVEYORS
711 N. PERSHING AVENUE
STOCKTON, CA 95203

SJCOG
555 E. WEBER AVE.
STOCKTON, CA 95202-2804

NOTES:
1. (N) NOT A SEPARATE ITEM, FOR INFORMATION ONLY.
2. ALL PVC PIPES SHALL HAVE RGJ.

ABBREVIATIONS:
SSMH - SANITARY SEWER MANHOLE
RGJ - RUBBER GASKET JOINT

SANITARY SEWER QUANTITIES

SANITARY SEWER PLAN SHEET No.	SANITARY SEWER SYSTEM No. ⬡	SANITARY SEWER UNIT ○	REMOVE SEWER PIPE (CITY) LF	ABANDON SEWER PIPE LF	SAND BACKFILL (CITY) CY	ABANDON SSMH EA	ADJUST SSMH TO GRADE EA	8" PVC LF	36" PWPVC LF	PIPE JOINT CLASSIFICATION (N)	SSMH (CITY TYPE 1) EA	SSMH (CITY TYPE 3) EA	Misc IRON AND STEEL (CITY) LB	MINOR CONCRETE (MINOR STRUCTURE) (CITY) CY	DESIGN H LF	MAXIMUM COVER (N) LF	DESCRIPTION	STATION	SANITARY SEWER PLAN SHEET No.	SANITARY SEWER SYSTEM No. ⬡	SANITARY SEWER UNIT ○
SS-1	1	a					1										ADJUST SSMH TO GRADE	"NY" LINE 36+72.84 0.90' Lt	SS-1	1	a
SS-1	2	a					1										ADJUST SSMH TO GRADE	"NY" LINE 41+24.91 21.51' Lt	SS-1	2	a
SS-1	3	a					1										ADJUST SSMH TO GRADE	"NY" LINE 47+38.27 4.97' Lt	SS-1	3	a
SS-1	4	a					1										ADJUST SSMH TO GRADE	"NY" LINE 48+77.47 4.69' Lt	SS-1	4	a
SS-1	5	a					1										ADJUST SSMH TO GRADE	"NY" LINE 50+49.57 4.88' Lt	SS-1	5	a
SS-2	6	a									1	270*	4.26*	12.8			SSMH (CITY TYPE 3)	"DN" LINE 13+19.70 3.30' Lt	SS-2	6	a
		b						12.0	RGJ							9.4	36" PWPVC RGJ	"DN" LINE 13+19.70 3.30' Lt			b
		c									1	270*	4.26*	12.8			SSMH (CITY TYPE 3)	"DN" LINE 13+11.23 5.15' Rt			c
		d						11.7	RGJ							9.3	36" PWPVC RGJ	"DN" LINE 13+11.23 5.15' Rt			d
		e									1	270*	4.26*	12.7			SSMH (CITY TYPE 3)	"DN" LINE 13+02.94 13.42' Rt			e
		f						198.3	RGJ							9.6	36" PWPVC RGJ	"DN" LINE 13+02.94 13.42' Rt			f
		g									1	270*	4.26*	12.7			SSMH (CITY TYPE 3)	"DN" LINE 11+04.60 14.02' Rt			g
		h						24.9	RGJ							10.0	36" PWPVC RGJ	"DN" LINE 11+04.60 14.02' Rt			h
SS-2	6	i									1	270*	4.26*	13.0			SSMH (CITY TYPE 3)	"DN" LINE 10+87.00 3.53' Lt	SS-2	6	i
SS-2	7	a	233													9.4	REMOVE SEWER PIPE	"DN" LINE 10+87.00 3.53' Lt	SS-2	7	a
SS-2	8	a	224													7.1	REMOVE SEWER PIPE	"DN" LINE 10+87.00 5.83' Rt	SS-2	8	a
SS-2	9	a								1		270*	1.95*	9.7			SSMH (CITY TYPE 1)	"DN" LINE 10+87.00 5.83' Rt	SS-2	9	a
SHEET TOTAL			457				5		246.9		1	5	1620*	23.25*							

* QUANTITY INCLUDED ON DQ SHEETS

SANITARY SEWER QUANTITIES
SSQ-1

STATE OF CALIFORNIA - DEPARTMENT OF TRANSPORTATION
Caltrans

CONSULTANT FUNCTIONAL SUPERVISOR: STEPHEN SINNOCK
CALCULATED-DESIGNED BY: ELIZABETH REGAN
CHECKED BY: MICHAEL CONRAD
REVISED BY
DATE REVISED

LAST REVISION 00-00-00
D. JITED => 23-JUL-2013
TIME JITED => 08:34

BORDER LAST REVISED 7/2/2010
USERNAME => s123631
DGN FILE => 1000000229jd001.dgn
RELATIVE BORDER SCALE IS IN INCHES 0 1 2 3
UNIT 1455
PROJECT NUMBER & PHASE 10000002291

Dist	COUNTY	ROUTE	POST MILES TOTAL PROJECT	SHEET No.	TOTAL SHEETS
10	SJ	4,5	Var	131	486

REGISTERED CIVIL ENGINEER 12/24/12 DATE

7-22-13
PLANS APPROVAL DATE

REGISTERED PROFESSIONAL ENGINEER MICHAEL CONRAD No. 32921 Exp. 06/30/2014 CIVIL STATE OF CALIFORNIA

THE STATE OF CALIFORNIA OR ITS OFFICERS OR AGENTS SHALL NOT BE RESPONSIBLE FOR THE ACCURACY OR COMPLETENESS OF SCANNED COPIES OF THIS PLAN SHEET.

KJELDSEN, SINNOCK & NEUDECK, INC.
CIVIL ENGINEERS & LAND SURVEYORS
711 N. PERSHING AVENUE
STOCKTON, CA 95203

SJCOG
555 E. WEBER AVE.
STOCKTON, CA 95202-2804

SANITARY SEWER QUANTITIES

SANITARY SEWER PLAN SHEET No.	SANITARY SEWER SYSTEM No. ⬡	SANITARY SEWER UNIT ○	REMOVE SEWER PIPE (CITY) LF	ABANDON SEWER PIPE LF	SAND BACKFILL (CITY) CY	ABANDON SSMH EA	ADJUST SSMH TO GRADE EA	8" PVC LF	36" PWPVC LF	PIPE JOINT CLASSIFICATION (N)	SSMH (CITY TYPE 1) EA	SSMH (CITY TYPE 3) EA	Misc IRON AND STEEL (CITY) LB	MINOR CONCRETE (MINOR STRUCTURE) (CITY) CY	DESIGN H LF	MAXIMUM COVER (N) LF	DESCRIPTION	STATION	SANITARY SEWER PLAN SHEET No.	SANITARY SEWER SYSTEM No. ⬡	SANITARY SEWER UNIT ○
SS-2	10	a									1		270 *	1.95 *	5.9		SSMH (CITY TYPE 1)	"LA" LINE 14+81.90 10.71' Lt	SS-2	10	a
↕	↕	b						88.3		RGJ						6.1	8" PVC RGJ	"LA" LINE 14+81.90 10.71' Lt	↕	↕	b
		c									1		270 *	1.95 *	6.9		SSMH (CITY TYPE 1)	"LA" LINE 15+70.18 10.76' Lt			c
SS-2	10	d						46.5								7.1	8" PVC RGJ	"LA" LINE 15+70.18 10.76' Lt	SS-2	10	d
SS-2	11	a				1											ABANDON SSMH	"LA" LINE 15+76.63 5.23' Lt	SS-2	11	a
SS-2	11	b		277	3.6												ABANDON SEWER	"LA" LINE 15+76.63 5.23' Lt	SS-2	11	b
SS-3	12	a					1										ADJUST SSMH TO GRADE	"NY" LINE 26+94.23 26.09' Lt	SS-3	12	a
SS-3	13	a					1										ADJUST SSMH TO GRADE	"NY" LINE 31+67.24 24.49' Lt	SS-3	13	a
SS-3	14	a					1										ADJUST SSMH TO GRADE	"NY" LINE 31+67.60 17.99' Rt	SS-3	14	a
SS-3	15	a					1										ADJUST SSMH TO GRADE	"NY" LINE 35+71.22 20.84' Lt	SS-3	15	a
SS-3	16	a					1										ADJUST SSMH TO GRADE	"NY" LINE 35+71.49 17.51' Rt	SS-3	16	a
SS-3	17	a					1										ADJUST SSMH TO GRADE	"NY" LINE 35+71.25 37.95' Rt	SS-3	17	a
SS-3	18	a					1										ADJUST SSMH TO GRADE	"NY" LINE 36+01.05 38.98' Rt	SS-3	18	a
SS-3	19	a					1										ADJUST SSMH TO GRADE	"NY" LINE 36+38.28 1.85' Lt	SS-3	19	a
SS-4	20	a					1										ADJUST SSMH TO GRADE	"NY" LINE 55+22.20 31.86' Lt	SS-4	20	a
SS-4	21	a					1										ADJUST SSMH TO GRADE	"NY" LINE 55+22.93 5.86' Lt	SS-4	21	a
SHEET TOTAL				277	3.6	1	10	134.8			2		540 *	3.90 *							

* QUANTITY INCLUDED ON DQ SHEETS

STATE OF CALIFORNIA - DEPARTMENT OF TRANSPORTATION
Caltrans

CONSULTANT FUNCTIONAL SUPERVISOR: STEPHEN SINNOCK
CALCULATED-DESIGNED BY: ELIZABETH REGAN
CHECKED BY: MICHAEL CONRAD
REVISED BY
DATE REVISED

LAST REVISION 00-00-00
DATE PLOTTED => 23-JUL-2013
TIME PLOTTED => 08:34

SANITARY SEWER QUANTITIES
SSQ-2

Dist	COUNTY	ROUTE	POST MILES TOTAL PROJECT	SHEET No.	TOTAL SHEETS
10	SJ	4,5	Var	133	486

REGISTERED CIVIL ENGINEER 12/24/12 DATE

7-22-13
PLANS APPROVAL DATE

REGISTERED PROFESSIONAL ENGINEER MICHAEL CONRAD No. 32921 Exp. 06/30/2014 CIVIL STATE OF CALIFORNIA

THE STATE OF CALIFORNIA OR ITS OFFICERS OR AGENTS SHALL NOT BE RESPONSIBLE FOR THE ACCURACY OR COMPLETENESS OF SCANNED COPIES OF THIS PLAN SHEET.

KJELDSEN, SINNOCK & NEUDECK, INC.
CIVIL ENGINEERS & LAND SURVEYORS
711 N. PERSHING AVENUE
STOCKTON, CA 95203

SJCOG
555 E. WEBER AVE.
STOCKTON, CA 95202-2804

SANITARY SEWER QUANTITIES SUMMARY

SANITARY SEWER QUANTITY SHEET No.	REMOVE SEWER PIPE (CITY)	ABANDON SEWER PIPE	SAND BACKFILL (CITY)	ABANDON SEWER MANHOLE	ADJUST SEWER MANHOLE TO GRADE	8" PVC	36" PWPVC	SSMH (CITY TYPE 1)	SSMH (CITY TYPE 3)	Misc IRON AND STEEL (CITY)	MINOR CONCRETE (MINOR STRUCTURE) (CITY)
	LF	LF	CY	EA	EA	LF		EA	EA	LB	CY
SSQ-1	457				5		246.9	1	5	1620	23.25
SSQ-2		277	3.6	1	10	134.8		2		540	3.90
SSQ-3					12						
TOTAL	457	277	3.6	1	27	134.8	246.9	3	5	2160*	27.15*

* QUANTITY INCLUDED ON DQ SHEETS

SANITARY SEWER QUANTITIES
SSQ-4

STATE OF CALIFORNIA - DEPARTMENT OF TRANSPORTATION
Caltrans

CONSULTANT FUNCTIONAL SUPERVISOR: STEPHEN SINNOCK
CALCULATED-DESIGNED BY: ELIZABETH REGAN
CHECKED BY: MICHAEL CONRAD
REVISED BY
DATE REVISED

LAST REVISION 00-00-00
DATE PLOTTED => 23-JUL-2013
TIME PLOTTED => 08:34

Dist	COUNTY	ROUTE	POST MILES TOTAL PROJECT	SHEET No.	TOTAL SHEETS
10	SJ	4,5	Var	147	486

REGISTERED CIVIL ENGINEER — DATE 9/28/12

7-22-13
PLANS APPROVAL DATE

REGISTERED PROFESSIONAL ENGINEER — NINH M. LE — No. 47518 — Exp. 12/31/13 — CIVIL — STATE OF CALIFORNIA

THE STATE OF CALIFORNIA OR ITS OFFICERS OR AGENTS SHALL NOT BE RESPONSIBLE FOR THE ACCURACY OR COMPLETENESS OF SCANNED COPIES OF THIS PLAN SHEET.

ALLIANCE ENGINEERING CONSULTANT, INC.
4701 PATRICK HENRY DR., #10
SANTA CLARA, CA 95054

SJCOG
555 E. WEBER Ave
STOCKTON, CA 95202-2804

NOTE:

1. FOR ACCURATE RIGHT OF WAY DATA, CONTACT RIGHT OF WAY ENGINEERING AT THE DISTRICT OFFICE.

POSITIVE LOCATION INFORMATION

No. ⬠	NORTHING	EASTING	Elev	DESCRIPTION AND REMARKS
41	2165908	6326114	2.96	6" CWS WATER
42	2165878	6326152	3.42	6" CWS WATER
43	2165903	6326152	3.64	18" CWS WATER
44	2165906	6326270	4.16	4" PG&E GAS

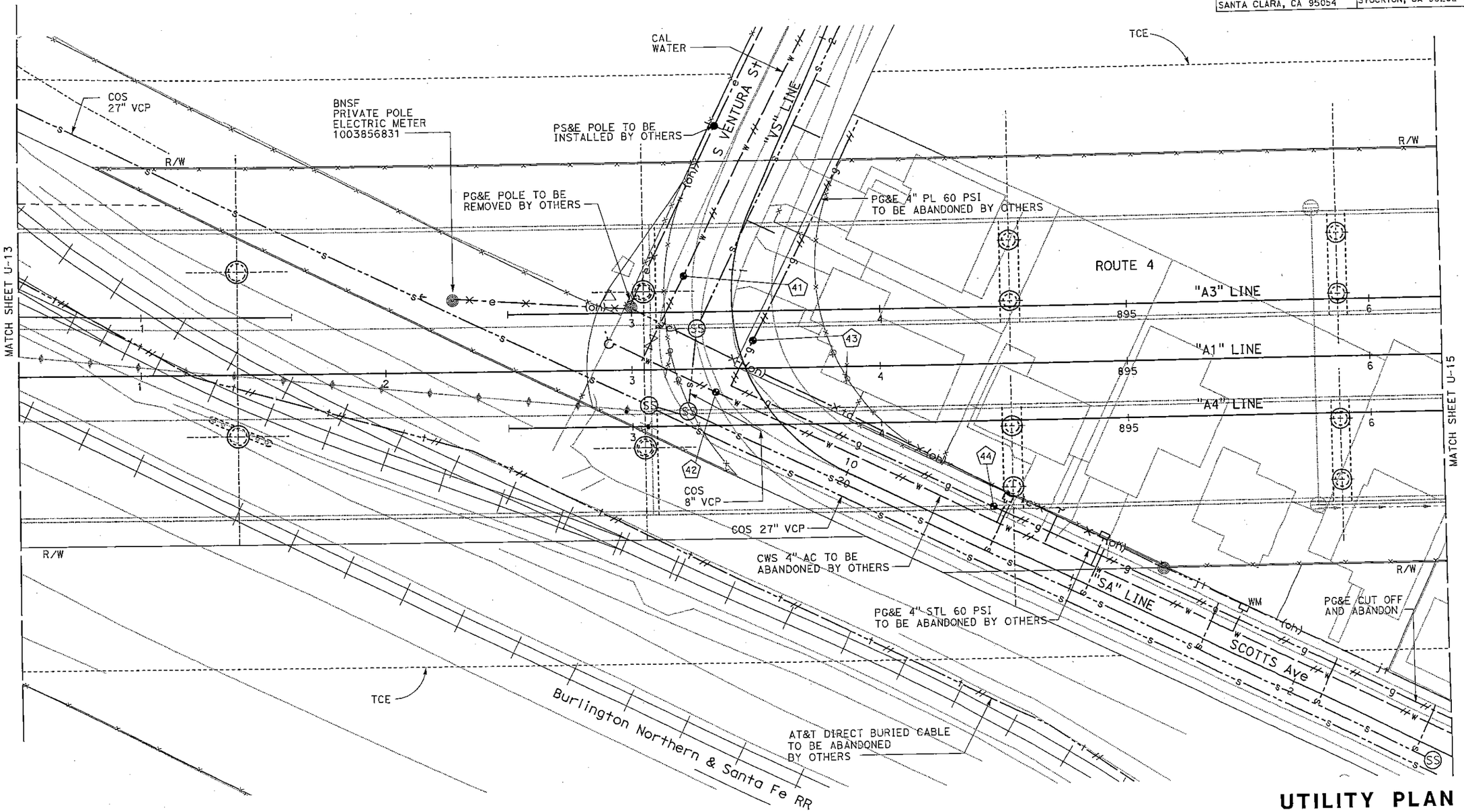

UTILITY PLAN

SCALE: 1" = 20'

U-14

2 REPLACED PER ADDENDUM No. 2 DATED NOVEMBER 5, 2013

APPROVED FOR UTILITY INFORMATION ONLY

REVISED BY	DATE REVISED
JOHN BEEBE	DAVID CLOW

CALCULATED-DESIGNED BY — CHECKED BY

CONSULTANT FUNCTIONAL SUPERVISOR — KEN NGAI

STATE OF CALIFORNIA - DEPARTMENT OF TRANSPORTATION — Caltrans

LAST REVISION 00-00-00 — DATE PLOTTED => 05-NOV-2013 — TIME PLOTTED => 05:51

BORDER LAST REVISED 7/2/2010

USERNAME => s121614
DGN FILE => 1000000229ka014.dgn

RELATIVE BORDER SCALE IS IN INCHES 0 1 2 3

UNIT 1455 — PROJECT NUMBER & PHASE 10000002291

Dist	COUNTY	ROUTE	POST MILES TOTAL PROJECT	SHEET No.	TOTAL SHEETS
10	SJ	4,5	Var	148	486

REGISTERED CIVIL ENGINEER 9/28/12 DATE

7-22-13
PLANS APPROVAL DATE

REGISTERED PROFESSIONAL ENGINEER NINH M. LE No. 47518 Exp. 12/31/13 CIVIL STATE OF CALIFORNIA

THE STATE OF CALIFORNIA OR ITS OFFICERS OR AGENTS SHALL NOT BE RESPONSIBLE FOR THE ACCURACY OR COMPLETENESS OF SCANNED COPIES OF THIS PLAN SHEET.

ALLIANCE ENGINEERING CONSULTANT, INC.
4701 PATRICK HENRY DR., #10
SANTA CLARA, CA 95054

SJCOG
555 E. WEBER Ave
STOCKTON, CA 95202-2804

POSITIVE LOCATION INFORMATION

No.	NORTHING	EASTING	Elev	DESCRIPTION
45	2166101	6326475	2.24	6" CWS WATER
45	2166101	6326475	3.07	4" PG&E GAS
47	2166317	6326852	4.8	2" CWS WATER
48	2166314	6326855	3.45	3" PG&E GAS

NOTE:

1. FOR ACCURATE RIGHT OF WAY DATA, CONTACT RIGHT OF WAY ENGINEERING AT THE DISTRICT OFFICE.

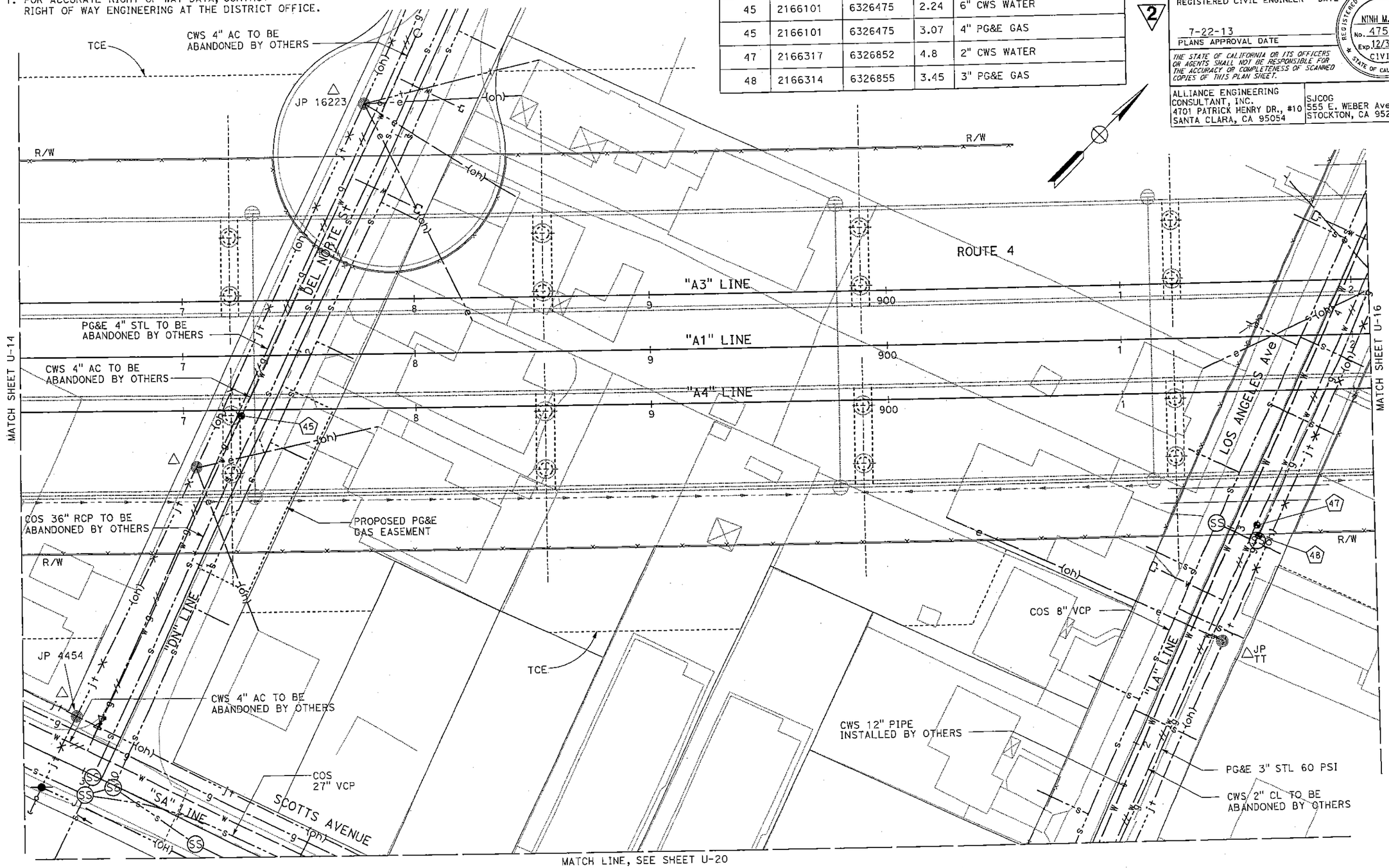

UTILITY PLAN

SCALE: 1" = 20'

U-15

2 REPLACED PER ADDENDUM No. 2 DATED NOVEMBER 5, 2013

APPROVED FOR UTILITY INFORMATION ONLY

STATE OF CALIFORNIA - DEPARTMENT OF TRANSPORTATION

Caltrans

CONSULTANT FUNCTIONAL SUPERVISOR: KEN NGAI

CALCULATED-DESIGNED BY: JOHN BEEBE

CHECKED BY: DAVID CLOW

REVISED BY | DATE REVISED

LAST REVISION 00-00-00 | DATE PLOTTED => 05-NOV-2013 | TIME PLOTTED => 05:51

BORDER LAST REVISED 7/2/2010

USERNAME => s121614
DGN FILE => 1000000229ka015.dgn

RELATIVE BORDER SCALE IS IN INCHES 0 1 2 3

UNIT 1455

PROJECT NUMBER & PHASE 10000002291

Dist	COUNTY	ROUTE	POST MILES TOTAL PROJECT	SHEET No.	TOTAL SHEETS
10	SJ	4,5	Var	149	486

REGISTERED CIVIL ENGINEER — DATE 9/28/12

7-22-13
PLANS APPROVAL DATE

REGISTERED PROFESSIONAL ENGINEER — NINH M. LE — No. 47518 — Exp. 12/31/13 — CIVIL — STATE OF CALIFORNIA

THE STATE OF CALIFORNIA OR ITS OFFICERS OR AGENTS SHALL NOT BE RESPONSIBLE FOR THE ACCURACY OR COMPLETENESS OF SCANNED COPIES OF THIS PLAN SHEET.

ALLIANCE ENGINEERING CONSULTANT, INC.
4701 PATRICK HENRY DR., #10
SANTA CLARA, CA 95054

SJCOG
555 E. WEBER Ave
STOCKTON, CA 95202-2804

NOTE:

1. FOR ACCURATE RIGHT OF WAY DATA, CONTACT RIGHT OF WAY ENGINEERING AT THE DISTRICT OFFICE.

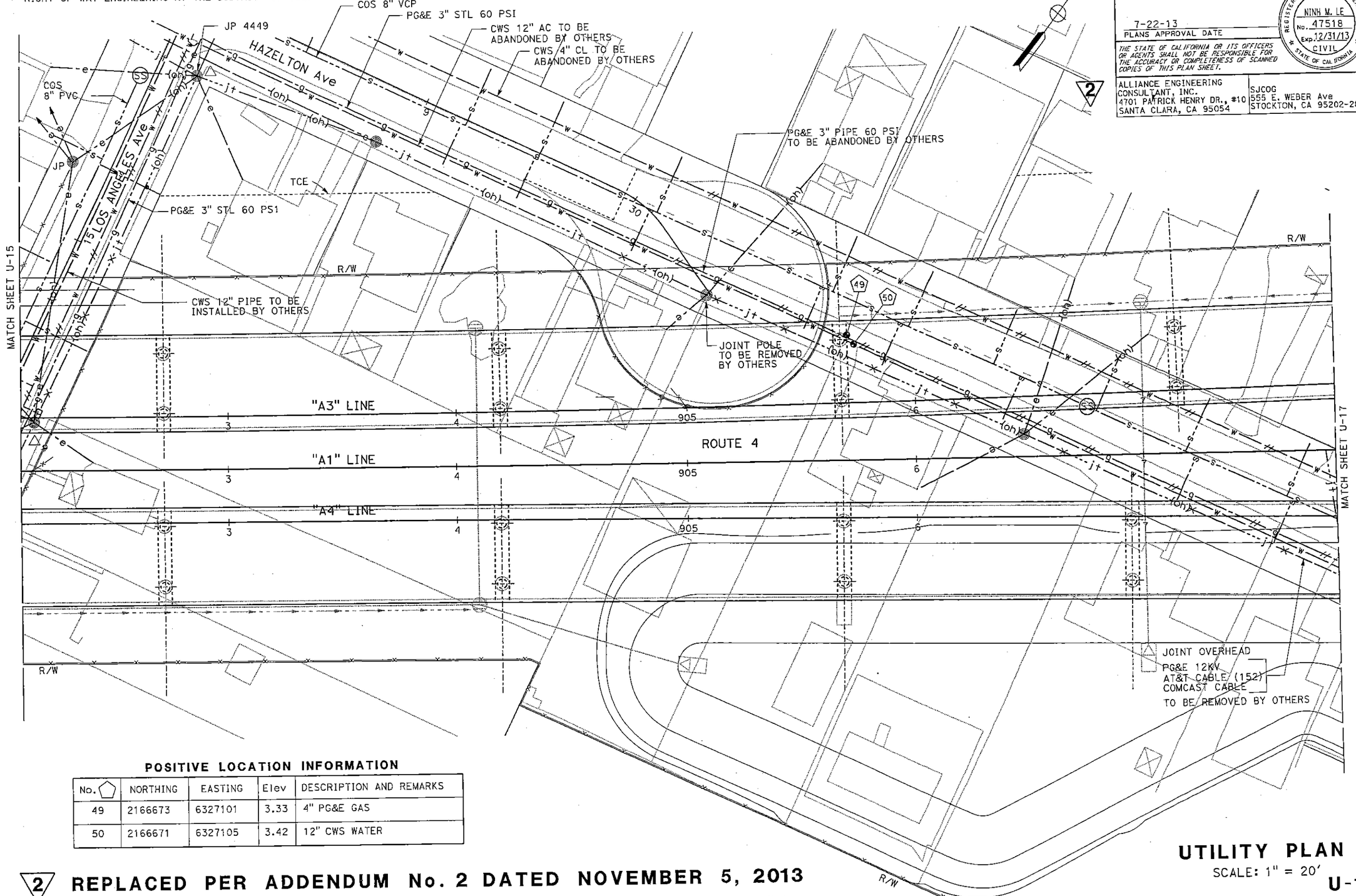

POSITIVE LOCATION INFORMATION

No. ⬠	NORTHING	EASTING	Elev	DESCRIPTION AND REMARKS
49	2166673	6327101	3.33	4" PG&E GAS
50	2166671	6327105	3.42	12" CWS WATER

2 **REPLACED PER ADDENDUM No. 2 DATED NOVEMBER 5, 2013**

APPROVED FOR UTILITY INFORMATION ONLY

UTILITY PLAN

SCALE: 1" = 20'

U-16

STATE OF CALIFORNIA - DEPARTMENT OF TRANSPORTATION

Caltrans

CONSULTANT FUNCTIONAL SUPERVISOR: KEN NGAI

CALCULATED-DESIGNED BY: JOHN BEEBE

CHECKED BY: DAVID CLOW

REVISED BY / DATE REVISED

LAST REVISION 00-00-00

DATE PLOTTED => 05-NOV-2013
TIME PLOTTED => 05:51

BORDER LAST REVISED 7/2/2010

USERNAME => s121614
DGN FILE => 1000000229ka016.dgn

RELATIVE BORDER SCALE IS IN INCHES 0 1 2 3

UNIT 1455

PROJECT NUMBER & PHASE 10000002291

Dist	COUNTY	ROUTE	POST MILES TOTAL PROJECT	SHEET No.	TOTAL SHEETS
10	SJ	4,5	Var	150	486

REGISTERED CIVIL ENGINEER — DATE 9/28/12

PLANS APPROVAL DATE 7-22-13

REGISTERED PROFESSIONAL ENGINEER — NINH W. LE No. 47518 Exp. 12/31/13 CIVIL — STATE OF CALIFORNIA

THE STATE OF CALIFORNIA OR ITS OFFICERS OR AGENTS SHALL NOT BE RESPONSIBLE FOR THE ACCURACY OR COMPLETENESS OF SCANNED COPIES OF THIS PLAN SHEET.

ALLIANCE ENGINEERING CONSULTANT, INC.
4701 PATRICK HENRY DR., #10
SANTA CLARA, CA 95054

SJCOG
555 E. WEBER Ave
STOCKTON, CA 95202-2804

NOTE:

1. FOR ACCURATE RIGHT OF WAY DATA, CONTACT RIGHT OF WAY ENGINEERING AT THE DISTRICT OFFICE.

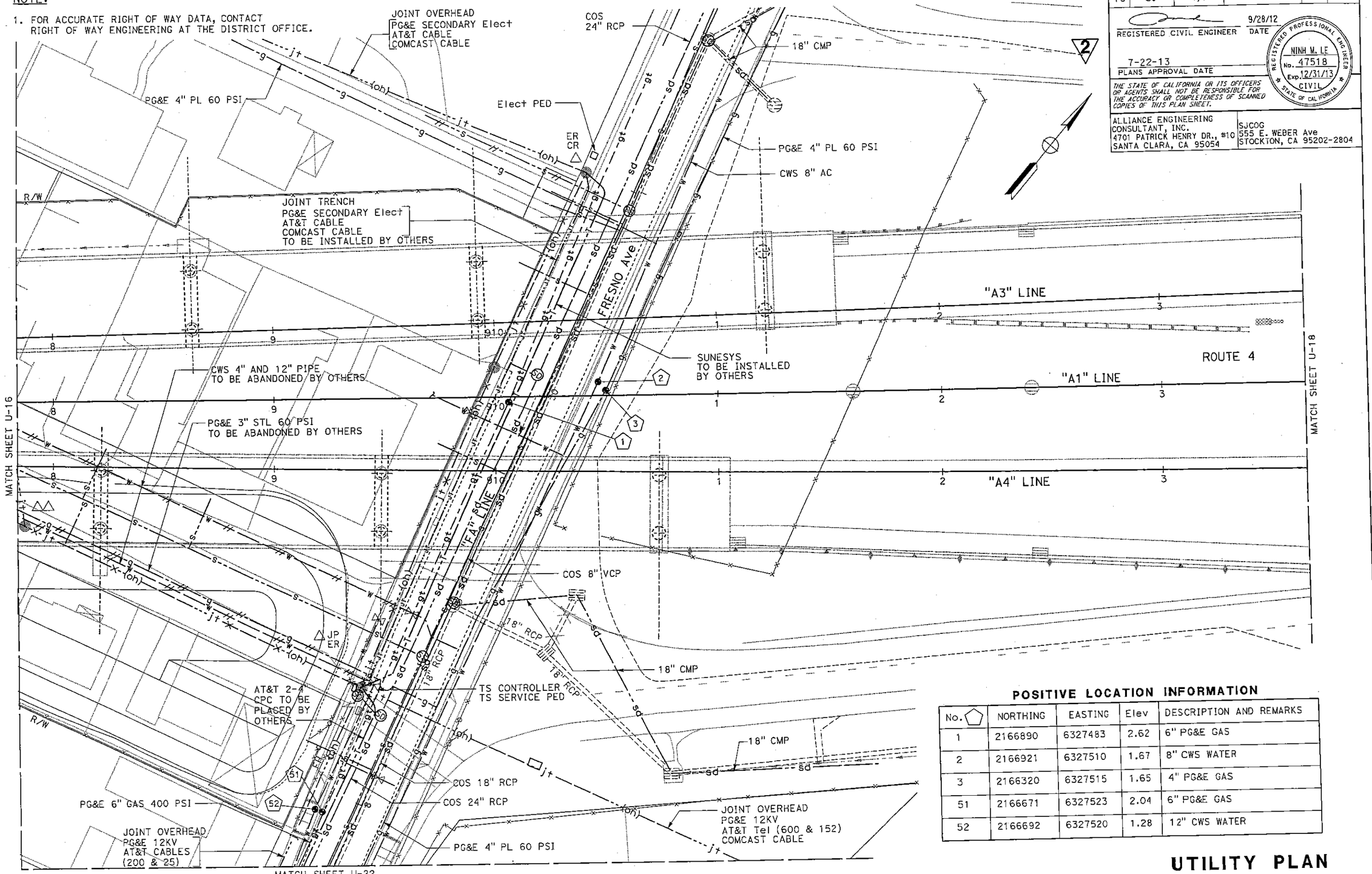

POSITIVE LOCATION INFORMATION

No. ⬠	NORTHING	EASTING	Elev	DESCRIPTION AND REMARKS
1	2166890	6327483	2.62	6" PG&E GAS
2	2166921	6327510	1.67	8" CWS WATER
3	2166320	6327515	1.65	4" PG&E GAS
51	2166671	6327523	2.04	6" PG&E GAS
52	2166692	6327520	1.28	12" CWS WATER

UTILITY PLAN

SCALE: 1" = 20'

U-17

2 **REPLACED PER ADDENDUM No. 2 DATED NOVEMBER 5, 2013**

APPROVED FOR UTILITY INFORMATION ONLY

REVISED BY | DATE REVISED

JOHN BEEBE | DAVID CLOW

CALCULATED-DESIGNED BY | CHECKED BY

CONSULTANT FUNCTIONAL SUPERVISOR: KEN NGAI

STATE OF CALIFORNIA - DEPARTMENT OF TRANSPORTATION

Caltrans

LAST REVISION 00-00-00 | DATE PLOTTED => 05-NOV-2013 | TIME PLOTTED => 05:51

BORDER LAST REVISED 7/2/2010

USERNAME => s121614
DGN FILE => 1000000229ko017.dgn

RELATIVE BORDER SCALE IS IN INCHES 0 1 2 3

UNIT 1455

PROJECT NUMBER & PHASE 10000002291